Plan Commission
REVISED Meeting Agenda
Tuesday November 22, 2016
6:30 p.m. Village Hall Court Room
3930 N. Murray Ave Village of Shorewood, WI 53211

---

1. Call to order.
2. Roll call.
3. Approval of October 25, 2016 meeting minutes.
4. Statement of Public Notice.
5. Consent Agenda and Public Hearing:
   a. Consideration of conditional use application for installation of solar panels at residential property 4478 N. Cramer St.
   b. Consideration of conditional use application for installation of solar panels at residential property 4322 N. Alpine Ave.
   c. Consideration of conditional use application for installation of solar panels at residential property 3535 N. Hackett St.
   d. Consideration of conditional use application for installation of solar panels at residential property 4240 N. Ardmore St.
6. Items removed from consent agenda.
7. Consideration of conditional use application for installation of multiple telecommunication antennae at multifamily structure 1700 E. River Park Court.
8. Consideration of recommendation to amend the zoning for River Park parcels to P-3 Park Preservation at 3505 N. Oakland Avenue, located within the parking lot.
9. Discuss outside storage zoning regulations in the business districts.
10. Schedule next meeting.
11. Adjournment.

Dated at Shorewood, Wisconsin, this 16th day of November, 2016

Tanya O'Malley, Village Clerk WCPC

PLEASE BE ADVISED THAT A REPRESENTATIVE OF THE APPLICANT FOR THE AGENDA ITEM MUST BE PRESENT AT THIS MEETING.
Should you have any questions or comments regarding any item on this agenda, please contact Ericka Lang, Planning Director, Planning & Development Department, at (414) 847-2640.
Upon reasonable notice, efforts will be made to accommodate the needs of disabled individuals.

It is possible that members of and possibly a quorum of members of other governmental bodies of the municipality may be in attendance at the above stated meeting to gather information; no action will be taken by any governmental body at the above stated meeting other than the governmental body specifically referred to above in this notice.

Plan Commission
Meeting Minutes
Tuesday October 25, 2016
3930 N. Murray Ave Village of Shorewood, Wisconsin 53211
DRAFT

1. **Call to order**.

   The meeting was called to order at 6:30 p.m.

2. **Roll call.**

Chair Pres. Guy Johnson	Aye
Tim Hansmann	Aye
Eric Couto	Aye
Chris Gallagher	Aye
Kari Smith	Aye
Tr. Mike Maher	Aye
Barbara Kiely Miller	Aye
Nate Piotrowski	Aye

3. **Approval of September 27, 2016 meeting minutes**.
   Mr. Piotrowski moved to approve the minutes, seconded by Mr. Couto. Vote 8-0 to approve.

   Village Attorney Nathan Bayer said while minutes may be detailed, that the law doesn't require. If the minutes are so detailed it may be argued that they represent a comprehensive discussion and that any conversation on policy could be taken as fact. Mr. Bayer suggested reducing the level of detail to minutes so they are not selective.

4. **Statement of Public Notice.**
   Planning Director Ericka Lang stated the meeting was posted and published according to local and state regulations.

5. **Consent Agenda and Public Hearing:**
   Chair Johnson opened the public hearing at 6:41 p.m. to see if anyone wanted to be heard on these items. None noted and the public hearing was closed at 6:41 p.m.

   a. **Consideration of conditional use application for installation of solar panels at residential property 4221 N. Morris Blvd**

   b. **Consideration of conditional use application for installation of solar panels at residential property 4269 N. Olsen Ave**.

   c. **Consideration of conditional use application for installation of solar panels at residential property 3726 N. Morris Blvd**

   d. **Consideration of conditional use application for installation of solar panels at residential property 2212 E. Menlo Blvd.**

Mr. Gallagher moved to approve all items under consent, seconded by Mr. Hansmann.

Ms. Kiely Miller asked to removed items 5c and 5d from the consent agenda.

Members voted 8-0 to approve items 5a and 5b.

6. Items removed from consent agenda.

Mr. Maher moved to approved item c for 3726 N. Morris Blvd for installing 14 solar panels, seconded by Mr. Gallagher. Mike Cornell from Arch Electric was present. Vote 8-0 to approve.

Mr. Couto moved to approve item d for 2212 E. Menlo Blvd, seconded by Mr. Maher. Homeowner Dan Wycklendt was present. Vote 8-0 to approve.

7. Public Hearing: Consideration of conditional use application for a temporary holiday tree business at municipal lot 3505 N. Oakland Avenue.

Mr. Johnson opened the public hearing at 6:45 p.m. for anyone wishing to speak. Hearing none, the public hearing was closed at 6:45 p.m.

Planning Director Ericka Lang introduced.

Mr. Gallagher moved to approve the conditional use application, seconded by Mr. Piotrowski.
Mr. Maher noted the request for a three-year approval. Mr. Bayer relayed that time may be applied to conditional uses.

Mr. Maher moved to approve the conditional use for a three-year period from year 2016 to 2018, seconded by Mr. Hansmann. Vote on amendment, 8-0.

Vote for amended motion, 8-0.

8. Consider recommendation of zoning amendment for Milwaukee River district bluff parcels to parks district P-3.

Ms. Lang introduced the item, explaining that three parcels along the Milwaukee River, directly south of Capitol Drive, are recommended for rezoning to P-3 Park Preservation. The first parcel is a small piece of land owned by Milwaukee County who requested the amendment. The other two bluff parcels were dedicated by two developers. Shorewood's River Riparian Plan adopted in 2009 recommended improving the bluff area for accessibility and eliminating invasive species.

Mr. Maher moved to recommend to the Village Board to rezone the three parcels along the Milwaukee River as presented in the materials dated October 25, 2016, seconded by Mr. Hansmann.

Mr. Maher reminded commissioners of Shorewood's Shoreland Zoning ordinance that prohibits building along the bluff.

Vote to approve the recommendation, 8-0.

9. Schedule next meeting.

A member preferred meetings on the regularly scheduled dates. The next meeting would be on November 22nd.

Mr. Maher requested to add to the meeting agenda a proposal to amend the zoning for some parcels in River Park to P-3 Park Preservation.

10. Adjournment.

Mr. Piotrowski moved to adjourn the meeting at 7:05 p.m.seconded by Ms. Smith. Vote 8-0.

Recorded by,

Ericka Lang

Shorewood

Report Plan Commission November 15, 2016

Prepared by: Planning Director Ericka Lang

RE: Conditional Use for Solar Panel 4478 N. Cramer Street

On October 12, 2016 the village received a conditional use application for installation of solar panels at residential property 4478 Cramer St. The property owner is Robert Longwell-Grice and the applicant is Arch Electric Inc.

Panel Description
The application is for 6 solar modules.

Zoning Code
Per 535-30D, installation and use of solar energy systems are a conditional use in all districts. The full code is attached. It also says that your commission shall review the proposed system and may only restrict if one of the following conditions is satisfied:

[1] Serves to preserve or protect the public health or safety.
[2] Does not significantly increase the cost of the system or significantly decrease its efficiency.
[3] Allows for an alternative system of comparable cost and efficiency.

The review and approval criteria in 535-30D apply to solar and wind energy systems.

APPLICATION FOR CONDITIONAL USE PERMIT

Village of Shorewood
Planning & Development Department
3930 N. Murray Avenue
Shorewood, WI 53211
Phone (414) 847-2640
Facsimile (414) 847-2648
www.villageofshorewood.org
PAD@villageofshorewood.org

Office Use Only	
General Fee $125	Solar Energy Fee $75
Permit No. 16-2072	
Zoning District R-6	
CUP Reason solar panels	
Code Reference 535-30	
Plan Comm. Meeting 11-22-2016	
Outcome	

CONDITIONAL USE APPLICATIONS ARE CONSIDERED BY THE PLAN COMMISSION. MEETINGS ARE THE 4TH TUESDAY EACH MONTH, AS NEEDED. APPLICATIONS ARE DUE 4 WEEKS BEFORE SCHEDULED MEETINGS AND ADDITIONAL MATERIALS AS IDENTIFIED BY THE PLANNING & DEVELOPMENT DEPARTMENT.

PROPERTY ADDRESS: 4478 N Cramer St.

PROPERTY OWNER

Owner Name: Robert Longwell- Grice
Phone Number: 414-964-5329
Email: ROBERT@UWM.EDU

Owner Address: 4478 N Cramer St.
Shorewood, WI 53211

APPLICANT/BUSINESS

Name: Arch Electric Inc.
Phone Number: 920-893-8388
Email: jen@archelec.com

Address:
1237 Pilgrim Rd. Ste 201
Plymouth, WI 53073

Check if prefer to receive Meeting Agenda by EMAIL: X PROPERTY OWNER X APPLICANT

BUSINESS INFORMATION

Name of Business Arch Electric Inc. Max # Employees On-site 4

Is a survey attached? (if required)

Is a parking plan attached? (if required)

*Provide copy of business plan

What do you wish to do that will require a Conditional Use Permit?
Install a fixed roof mounted 6 panel 1.98 KW Solar PV System

SIGNATURE Jen Simons DATE 10/12/16

4478 Cramer

November 15, 2016

Address Numbers

Parcels

Streets

1:282

0 0.00225 0.0045 0.009 mi

0 0.0025 0.005 0.01 km

Milwaukee County Land Information Office

Web AppBuilder for ArcGIS
Milwaukee County Land Information Office |

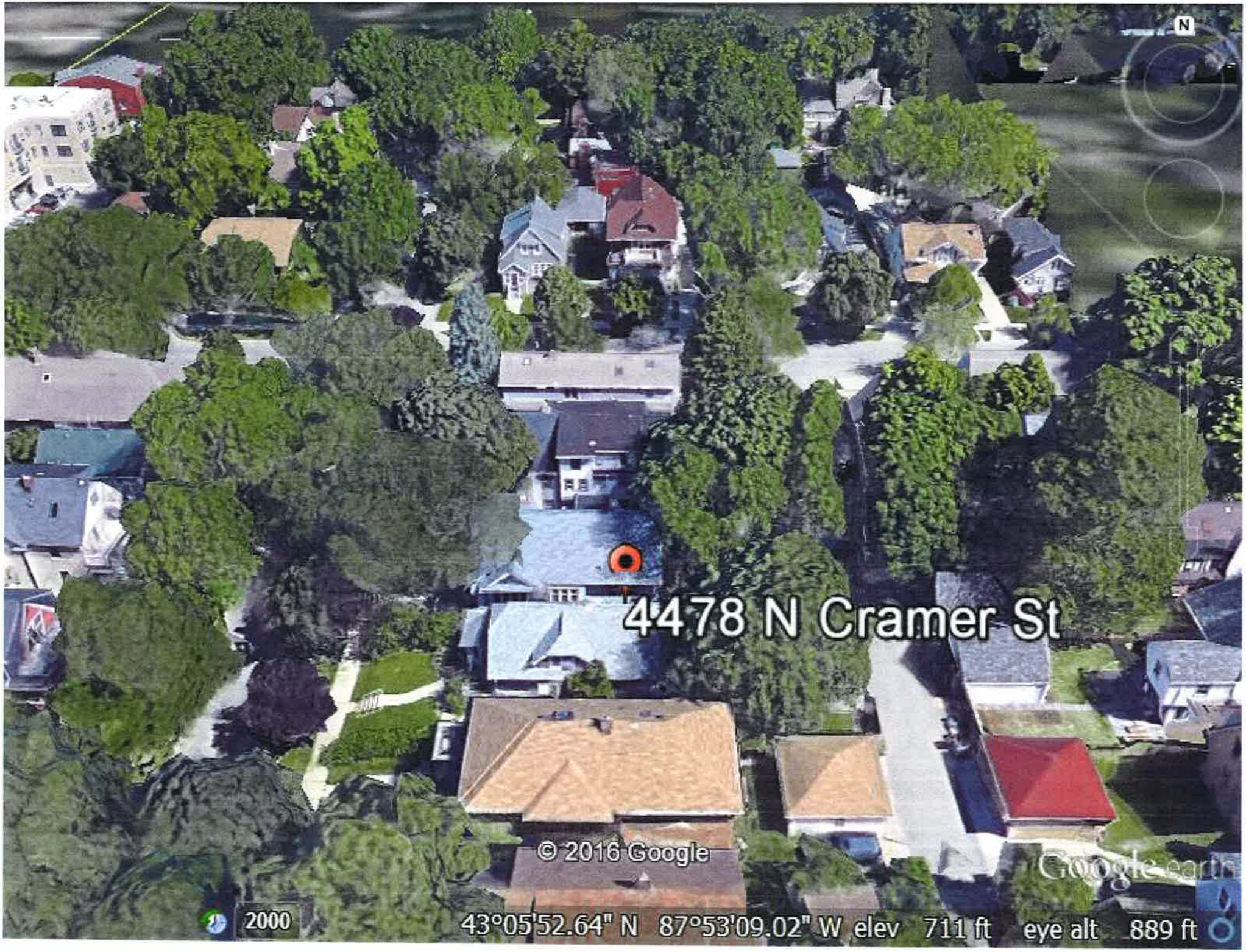
4478 N Cramer St
© 2016 Google
Google earth
2000
43°05'52.64" N 87°53'09.02" W elev 711 ft eye alt 889 ft

UNIRAC

U-BUILDER PROJECT REPORT
VERSION: 1.4.6

SEP 23, 2016, 07:37 PM

PROJECT TITLE: ROBERT LONGWELL GRICE
PROJECT ID: F7A725F7

		Designed by
Name:	Robert Longwell Grice	Russel@archelec.com
Address:	4478 N Cramer St Shorewood Wi 53211	SOLARMOUNT
City, State:	Milwaukee, WI, 53211	6 - 330 Watt Panels
Module:	Hanwha Solar Q-PLUS-G4.2 330	129 Sq Ft.
	330 Watts	2.0 kWs

ENGINEERING REPORT

Plan review

Loads Used for Design

- Building Code:	ASCE 7-05
- Wind Speed:	90 mph
- Ground Snow Load:	30 psf
- Seismic (Ss):	0.09
- Wind Exposure:	B

Loads Determined by Zip

- City, State:	Milwaukee, WI
- Wind Speed:	90 mph
- Ground Snow Load:	30 psf

Inspection

Product:	SOLARMOUNT
Module Manufacturer:	Hanwha Solar
Model:	Q-PLUS-G4.2 330
Module Watts:	330 watts
Module Length:	78.50 "
Module Width:	39.40 "
Module Thickness:	1.38 "

Expansion Joints:	Every 40'
Rails Direction:	EW
Building Height:	30 ft.
Roof Type:	Shingle
Total Weight:	317.40 lbs

WORKSPACE 1

Roof Point Load Up:	-147 lbs	**Maximum Rail Span (Zone 1):**	51"
Roof Point Load Down:	245 lbs	**Selected Rail Span:**	48"
		Maximum Rail Cantilever:	16.00 "
Total Number of Modules:	6	**Roof Pitch:**	12:12
Total KW:	2.0 KW		
Rows/ Columns:	2 / 3 (no gaps)		
NS Dimension:	~13.1 ft		
EW Dimension:	~10.1 ft		

UNIRAC

U-BUILDER PROJECT REPORT
VERSION: 1.4.6

SEP 23, 2016, 07:37 PM

PROJECT TITLE: ROBERT LONGWELL GRICE
PROJECT ID: F7A725F7

Name:	Robert Longwell Grice	Designed by Russel@archelec.com
Address:	4478 N Cramer St Shorewood Wi 53211	SOLARMOUNT
City, State:	Milwaukee, WI, 53211	6 - 330 Watt Panels
Module:	Hanwha Solar Q-PLUS-G4.2 330	129 Sq Ft.
	330 Watts	2.0 kWs

INSTALLATION AND DESIGN PLAN

LAYOUT WORKSPACE 1

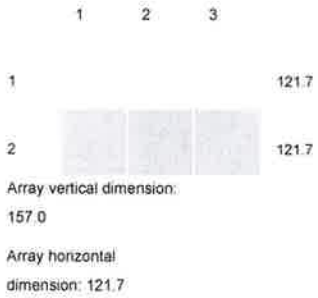

Row	Modules	Zone	Rail Type	Splices	Roof Attachments
1	3	Zone 1	SM RAIL 168" MILL | 320168M | $70 (2)	0	6
2	3	Zone 2	SM RAIL 168" MILL | 320168M | $70 (2)	0	12

Maximum Rail Span (Zone 1*):	51.00"
Selected Rail Span:	48.00"
Maximum Rail Cantilever:	16.00"
Module Orientation:	Portrait
Rail Direction:	EW

*Zone 2 and 3 Rail Spans must be independently verified

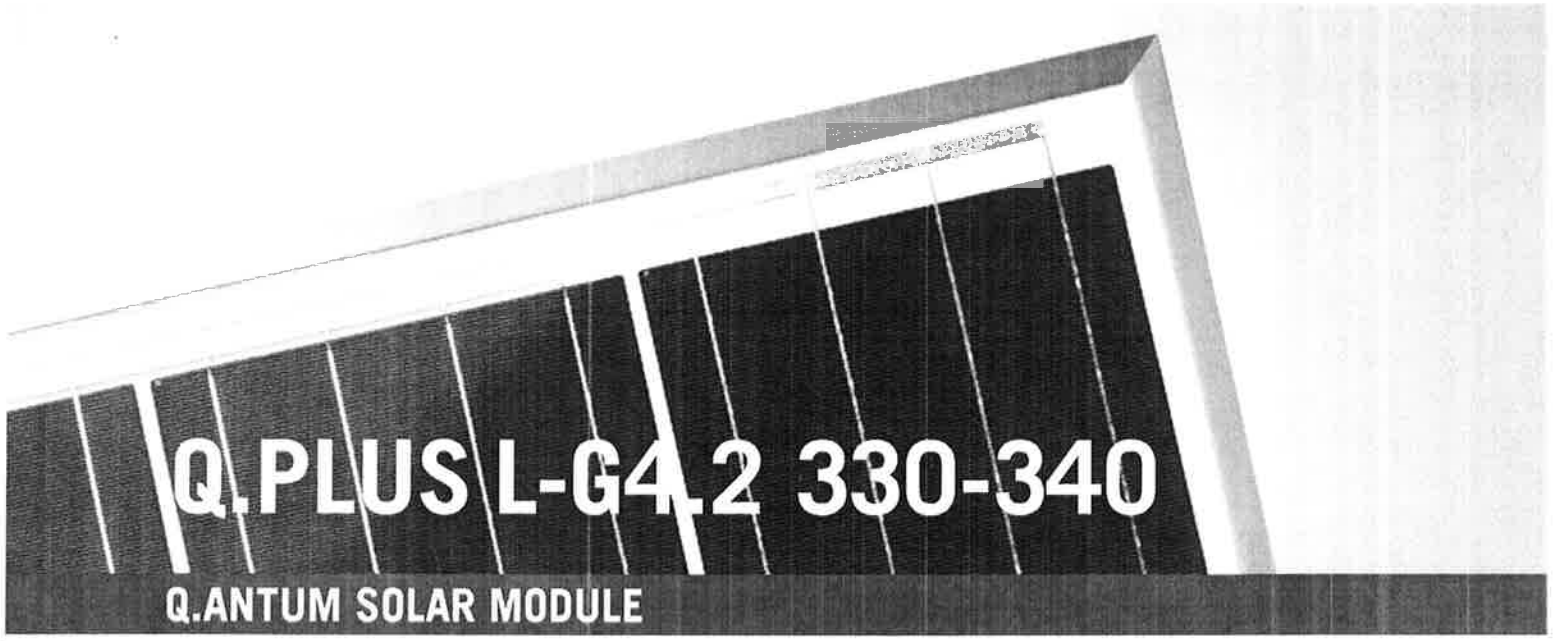

Q.PLUS L-G4.2 330-340

Q.ANTUM SOLAR MODULE

The Q.ANTUM solar module Q.PLUS L-G4.2 with power classes up to 340 Wp is the strongest module of its type on the market globally. Powered by 72 Q CELLS solar cells Q.PLUS L-G4.2 was specially designed for large solar power plants to reduce BOS costs. Only Q CELLS offers German engineering quality with our unique triple Yield Security.

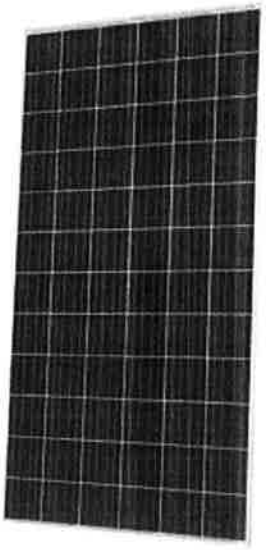

LOW ELECTRICITY GENERATION COSTS

Higher yield per surface area and lower BOS costs thanks to higher power classes and an efficiency rate of up to 17.4 %.

INNOVATIVE ALL-WEATHER TECHNOLOGY

Optimal yields, whatever the weather with excellent low-light and temperature behavior.

ENDURING HIGH PERFORMANCE

Long-term yield security with Anti-PID Technology[1], Hot-Spot-Protect and Traceable Quality Tra.Q™.

LIGHT WEIGHT QUALITY FRAME

High-tech aluminum alloy frame, certified for high snow (5400 Pa) and wind loads (2400 Pa).

A RELIABLE INVESTMENT

Inclusive 12-year product warranty and 25-year linear performance guarantee[2].

EUPD RESEARCH TOP BRAND PV MODULES 2015

Q CELLS FIELD SECURITY
ANTI PID TECHNOLOGY (APT)
HOT-SPOT PROTECT (HSP)
TRACEABLE QUALITY (TRA.Q™)

Photon
Q CELLS
Best polycrystalline solar module 2013
Q.PRO-G2 235

[1] APT test conditions: Cells at -1000 V against grounded, with conductive metal foil covered module surface, 25 °C, 168 h

[2] See data sheet on rear for further information.

THE IDEAL SOLUTION FOR:

Ground-mounted solar power plants

Engineered in **Germany**

Q CELLS

MECHANICAL SPECIFICATION

Format	78.5 in × 39.4 in × 1.38 in (including frame) (1994 mm × 1000 mm × 35 mm)
Weight	52.9 lb (24 kg)
Front Cover	0.13 in (3.2 mm) thermally pre-stressed glass with anti-reflection technology
Back Cover	Composite film
Frame	Anodised aluminum
Cell	6 × 12 Q.ANTUM solar cells
Junction box	3.35-4.13 in × 2.36-3.15 in × 0.59-0.67 in (85-105 mm × 60-80 mm × 15-17 mm), Protection class ≥IP67, with bypass diodes
Cable	4 mm² Solar cable; (+) ≥ 47.24 in (1200 mm), (-) ≥ 47.24 in (1200 mm)
Connector	Amphenol H4 UTX, IP68

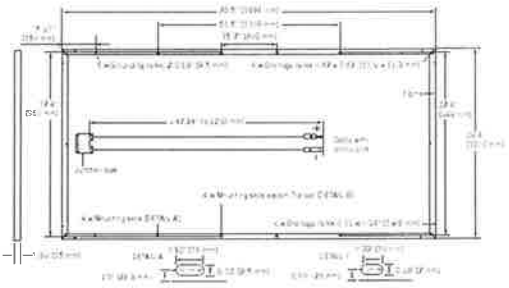

ELECTRICAL CHARACTERISTICS

POWER CLASS				330	335	340
MINIMUM PERFORMANCE AT STANDARD TEST CONDITIONS, STC[1] (POWER TOLERANCE +5 W / -0 W)						
Minimum	Power at MPP[2]	P_{MPP}	[W]	330	335	340
	Short Circuit Current*	I_{SC}	[A]	9.49	9.54	9.59
	Open Circuit Voltage*	V_{OC}	[V]	46.55	46.81	47.07
	Current at MPP*	I_{MPP}	[A]	8.91	8.97	9.03
	Voltage at MPP*	V_{MPP}	[V]	37.02	37.33	37.63
	Efficiency[2]	η	[%]	≥16.5	≥16.8	≥17.1
MINIMUM PERFORMANCE AT NORMAL OPERATING CONDITIONS, NOC[3]						
Minimum	Power at MPP[2]	P_{MPP}	[W]	244.7	248.4	252.1
	Short Circuit Current*	I_{SC}	[A]	7.65	7.69	7.73
	Open Circuit Voltage*	V_{OC}	[V]	43.44	43.68	43.92
	Current at MPP*	I_{MPP}	[A]	6.99	7.04	7.09
	Voltage at MPP*	V_{MPP}	[V]	35.01	35.29	35.56

[1] 1000 W/m², 25°C, spectrum AM 1.5G [2] Measurement tolerances STC ±3%; NOC ±5% [3] 800 W/m², NOCT, spectrum AM 1.5G * typical values, actual values may differ

Q CELLS PERFORMANCE WARRANTY

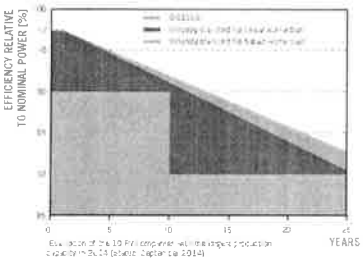

At least 97 % of nominal power during first year. Thereafter max. 0.6 % degradation per year.
At least 92 % of nominal power after 10 years.
At least 83 % of nominal power after 25 years.

All data within measurement tolerances. Full warranties in accordance with the warranty terms of the Q CELLS sales organisation of your respective country.

PERFORMANCE AT LOW IRRADIANCE

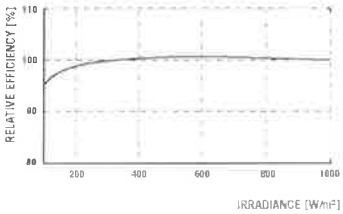

Typical module performance under low irradiance conditions in comparison to STC conditions (25 °C, 1000 W/m²)

TEMPERATURE COEFFICIENTS

Temperature Coefficient of I_{SC}	α	[%/K]	+0.04	Temperature Coefficient of V_{OC}	β	[%/K]	−0.29
Temperature Coefficient of P_{MPP}	γ	[%/K]	−0.40	Normal Operating Cell Temperature	NOCT	[°F]	113 ± 5.4 (45 ± 3 °C)

PROPERTIES FOR SYSTEM DESIGN

Maximum System Voltage V_{SYS}	[V]	1500 (IEC) / 1500 (UL)	Safety Class	II
Maximum Series Fuse Rating	[A DC]	15	Fire Rating	C / TYPE 1
Max Load (UL)[2]	[lbs/ft²]	75 (3600 Pa)	Permitted module temperature on continuous duty	-40 °F up to +185 °F (-40 °C up to +85 °C)
Load Rating (UL)[2]	[lbs/ft²]	33 (1600 Pa)	[2] see installation manual	

QUALIFICATIONS AND CERTIFICATES

IEC 61215 (Ed. 2); IEC 61730 (Ed. 1), Application class A
This data sheet complies with DIN EN 50380

PACKAGING INFORMATION

Number of Modules per Pallet	29
Number of Pallets per 40' Container	22
Pallet Dimensions (L × W × H)	81.3 × 45.3 × 46.9 in (2065 × 1150 × 1190 mm)
Pallet Weight	1671 lbs (758 kg)

NOTE: Installation instructions must be followed. See the installation and operating manual or contact our technical service department for further information on approved installation and use of this product.

Hanwha Q CELLS USA Corp.
300 Spectrum Center Drive, Suite 1250, Irvine, CA 92618, USA | TEL +1 949 748 59 96 | WEB www.q-cells.com

Engineered in **Germany**

Q CELLS

Specifications subject to technical changes © Hanwha Q CELLS Q.PLUS L-G4.2_330-340_2015-09_Rev03_NA

Shorewood

Report Plan Commission November 15, 2016

Prepared by: Planning Director Ericka Lang

RE: Conditional Use for Solar Panel 4322 N. Alpine Avenue

On October 13, 2016 the village received a conditional use application for installation of solar panels at residential property 3535 N. Hackett St. The property owner is Randy Joos and the applicant is Arch Electric Inc.

Panel Description
The house faces northwest and the application is for 10 solar modules mounted on the back, southeast roof elevation.

Zoning Code
Per 535-30D, installation and use of solar energy systems are a conditional use in all districts. The full code is attached. It also says that your commission shall review the proposed system and may only restrict if one of the following conditions is satisfied:

> [1] Serves to preserve or protect the public health or safety.
> [2] Does not significantly increase the cost of the system or significantly decrease its efficiency.
> [3] Allows for an alternative system of comparable cost and efficiency.

The review and approval criteria in 535-30D apply to solar and wind energy systems.

APPLICATION FOR CONDITIONAL USE PERMIT

Village of Shorewood
Planning & Development Department
3930 N. Murray Avenue
Shorewood, WI 53211
Phone (414) 847-2640
Facsimile (414) 847-2648
www.villageofshorewood.org
PAD@villageofshorewood.org

Office Use Only	
General Fee $125	**Solar Energy Fee $75**
Permit No. 16-2073	
Zoning District	
CUP Reason	
Code Reference	
Plan Comm. Meeting	
Outcome	

CONDITIONAL USE APPLICATIONS ARE CONSIDERED BY THE PLAN COMMISSION. MEETINGS ARE THE 4TH TUESDAY EACH MONTH, AS NEEDED. APPLICATIONS ARE DUE 4 WEEKS BEFORE SCHEDULED MEETINGS AND ADDITIONAL MATERIALS AS IDENTIFIED BY THE PLANNING & DEVELOPMENT DEPARTMENT.

PROPERTY ADDRESS: 4322 N. ALPINE AVE.

PROPERTY OWNER

Owner Name: RANDY JOOS
Phone Number: 262-416-7031
Email: RANDYJOOS@HOTMAIL.COM

Owner Address: 4322 N. ALPINE AVE.
Shorewood, WI 53211

APPLICANT/BUSINESS

Name: Arch Electric Inc.
Phone Number: 920-893-8388
Email: jen@archelec.com

Address:
1237 Pilgrim Rd. Ste 201
Plymouth, WI 53073

Check if prefer to receive Meeting Agenda by EMAIL: X PROPERTY OWNER X APPLICANT

BUSINESS INFORMATION

Name of Business Arch Electric Inc. Max # Employees On-site 4

Is a survey attached? (if required)

Is a parking plan attached? (if required)

*Provide copy of business plan

What do you wish to do that will require a Conditional Use Permit?
Install a fixed roof mounted 10 panel 3.3 KW Solar PV System

SIGNATURE

DATE 10/12/16

04/23/2014

4322 Alpine

November 15, 2016

Address Numbers

Parcels

Streets

1:282

0 0.00225 0.0045 0.009 mi

0 0.0025 0.005 0.01 km

Milwaukee County Land Information Office

Web AppBuilder for ArcGIS
Milwaukee County Land Information Office |

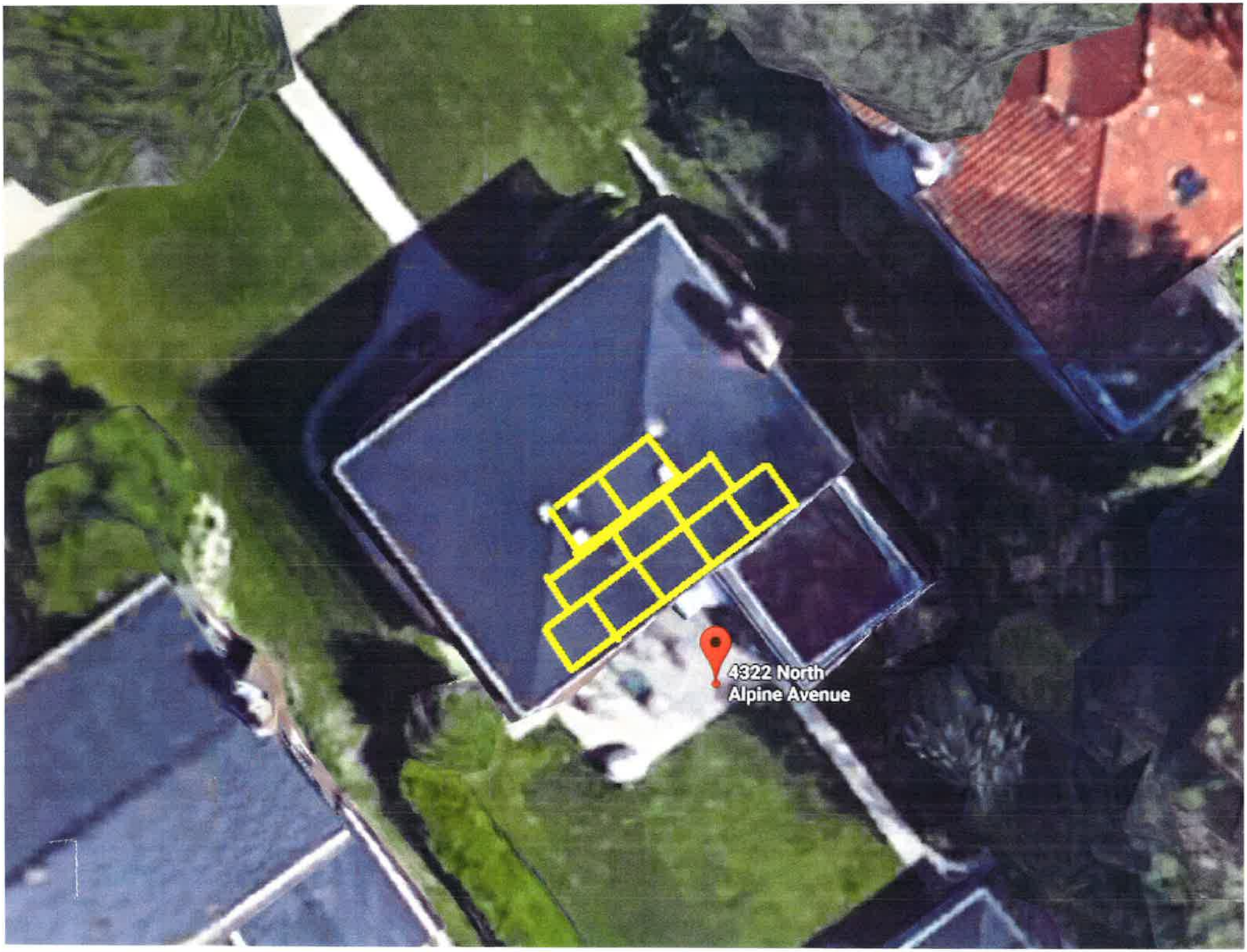
4322 North
Alpine Avenue

UNIRAC

U-BUILDER PROJECT REPORT
VERSION: 1.4.6

SEP 23, 2016, 08:12 PM

PROJECT TITLE: RANDY JOOS
PROJECT ID: CF65ACDF

		Designed by
Name:	Randy Joos	Russel@archelec.com
Address:	4322 N Alpine Ave Shorewood Wi 53211	SOLARMOUNT
City, State:	Milwaukee, WI, 53211	10 - 330 Watt Panels
Module:	Hanwha Solar Q-PLUS-G4.2 330	215 Sq Ft.
	330 Watts	3.3 kWs

ENGINEERING REPORT

Plan review

Loads Used for Design	
- Building Code:	ASCE 7-05
- Wind Speed:	90 mph
- Ground Snow Load:	30 psf
- Seismic (Ss):	0.09
- Wind Exposure:	B
Loads Determined by Zip	
- City, State:	Milwaukee, WI
- Wind Speed:	90 mph
- Ground Snow Load:	30 psf

Inspection

Product:	SOLARMOUNT
Module Manufacturer:	Hanwha Solar
Model:	Q-PLUS-G4.2 330
Module Watts:	330 watts
Module Length:	78.50 "
Module Width:	39.40 "
Module Thickness:	1.38 "
Expansion Joints:	Every 40'
Rails Direction:	EW
Building Height:	30 ft.
Roof Type:	Shingle
Total Weight:	529.00 lbs

WORKSPACE 1

Roof Point Load Up:	-147 lbs	**Maximum Rail Span (Zone 1):**	51"
Roof Point Load Down:	245 lbs	**Selected Rail Span:**	48"
		Maximum Rail Cantilever:	16.00 "
Total Number of Modules:	10	**Roof Pitch:**	12:12
Total KW:	3.3 KW		
Rows/ Columns:	2 / 5 (no gaps)		
NS Dimension:	~13.1 ft		
EW Dimension:	~16.8 ft		

UNIRAC

U-BUILDER PROJECT REPORT
VERSION: 1.4.6

SEP 23, 2016, 08:12 PM

PROJECT TITLE: RANDY JOOS
PROJECT ID: CF65ACDF

Name:	Randy Joos	Designed by Russel@archelec.com
Address:	4322 N Alpine Ave Shorewood Wi 53211	SOLARMOUNT
City, State:	Milwaukee, WI, 53211	10 - 330 Watt Panels
Module:	Hanwha Solar Q-PLUS-G4.2 330	215 Sq Ft.
	330 Watts	3.3 kWs

INSTALLATION AND DESIGN PLAN

LAYOUT WORKSPACE 1

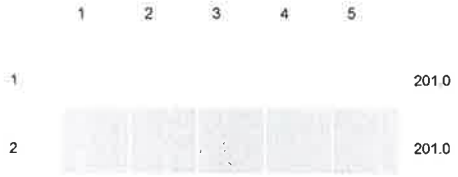

Array vertical dimension: 157.0

Array horizontal dimension: 201.0

Row	Modules	Zone	Rail Type	Splices	Roof Attachments
1	5	Zone 1	SM RAIL 240" MILL | 320240M | $101 (2)	0	10
2	5	Zone 2	SM RAIL 240" MILL | 320240M | $101 (2)	0	20

Maximum Rail Span (Zone 1*):	51.00"
Selected Rail Span:	48.00"
Maximum Rail Cantilever:	16.00"
Module Orientation:	Portrait
Rail Direction:	EW

*Zone 2 and 3 Rail Spans must be independently verified

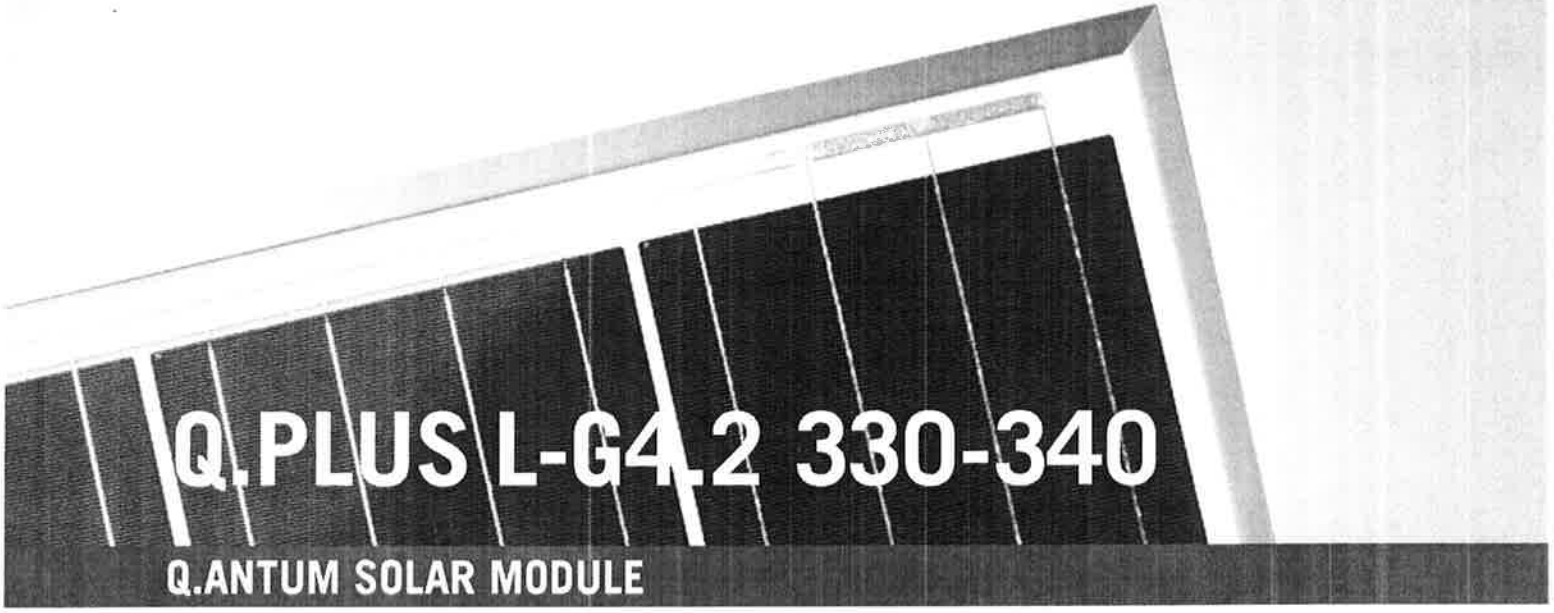

Q.PLUS L-G4.2 330-340

Q.ANTUM SOLAR MODULE

The Q.ANTUM solar module Q.PLUS L-G4.2 with power classes up to 340 Wp is the strongest module of its type on the market globally. Powered by 72 Q CELLS solar cells Q.PLUS L-G4.2 was specially designed for large solar power plants to reduce BOS costs. Only Q CELLS offers German engineering quality with our unique triple Yield Security.

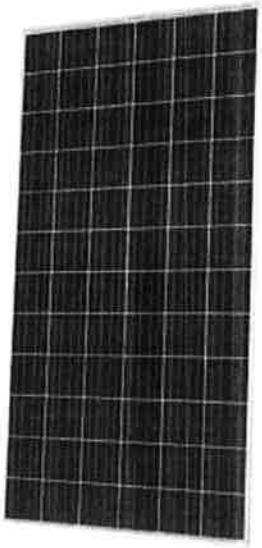

LOW ELECTRICITY GENERATION COSTS

Higher yield per surface area and lower BOS costs thanks to higher power classes and an efficiency rate of up to 17.4 %.

INNOVATIVE ALL-WEATHER TECHNOLOGY

Optimal yields, whatever the weather with excellent low-light and temperature behavior.

ENDURING HIGH PERFORMANCE

Long-term yield security with Anti-PID Technology[1], Hot-Spot-Protect and Traceable Quality Tra.Q™.

LIGHT-WEIGHT QUALITY FRAME

High-tech aluminum alloy frame, certified for high snow (5400 Pa) and wind loads (2400 Pa).

A RELIABLE INVESTMENT

Inclusive 12-year product warranty and 25-year linear performance guarantee[2].

EUPD RESEARCH TOP BRAND PV MODULES 2015

Q CELLS FIELD SECURITY
ANTI PID TECHNOLOGY (APT)
HOT-SPOT PROTECT (HSP)
TRACEABLE QUALITY (TRA.Q™)

Photon
Q CELLS
Best polycrystalline solar module 2013
Q.PRO-G2 235
151 watts/m²

[1] APT test conditions: Cells at -1000 V against grounded, with conductive metal foil covered module surface, 25 °C, 168 h

[2] See data sheet on rear for further information.

THE IDEAL SOLUTION FOR:

Ground-mounted solar power plants

Engineered in **Germany**

Q CELLS

MECHANICAL SPECIFICATION

Format	78.5 in × 39.4 in × 1.38 in (including frame) (1994 mm × 1000 mm × 35 mm)
Weight	52.9 lb (24 kg)
Front Cover	0.13 in (3.2 mm) thermally pre-stressed glass with anti-reflection technology
Back Cover	Composite film
Frame	Anodised aluminum
Cell	6 × 12 Q.ANTUM solar cells
Junction box	3.35-4.13 in × 2.36-3.15 in × 0.59-0.67 in (85-105 mm × 60-80 mm × 15-17 mm), Protection class ≥IP67, with bypass diodes
Cable	4 mm² Solar cable; (+) ≥ 47.24 in (1200 mm), (-) ≥ 47.24 in (1200 mm)
Connector	Amphenol H4 UTX, IP68

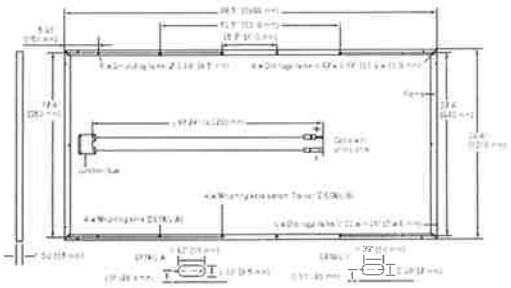

ELECTRICAL CHARACTERISTICS

POWER CLASS				330	335	340
MINIMUM PERFORMANCE AT STANDARD TEST CONDITIONS, STC[1] (POWER TOLERANCE +5 W / -0 W)						
Minimum	Power at MPP[2]	P_{MPP}	[W]	330	335	340
	Short Circuit Current*	I_{SC}	[A]	9.49	9.54	9.59
	Open Circuit Voltage*	V_{OC}	[V]	46.55	46.81	47.07
	Current at MPP*	I_{MPP}	[A]	8.91	8.97	9.03
	Voltage at MPP*	V_{MPP}	[V]	37.02	37.33	37.63
	Efficiency[2]	η	[%]	≥16.5	≥16.8	≥17.1
MINIMUM PERFORMANCE AT NORMAL OPERATING CONDITIONS, NOC[3]						
Minimum	Power at MPP[2]	P_{MPP}	[W]	244.7	248.4	252.1
	Short Circuit Current*	I_{SC}	[A]	7.65	7.69	7.73
	Open Circuit Voltage*	V_{OC}	[V]	43.44	43.68	43.92
	Current at MPP*	I_{MPP}	[A]	6.99	7.04	7.09
	Voltage at MPP*	V_{MPP}	[V]	35.01	35.29	35.56

[1] 1000 W/m², 25°C, spectrum AM 1.5G [2] Measurement tolerances STC ±3%; NOC ±5% [3] 800 W/m², NOCT, spectrum AM 1.5G * typical values, actual values may differ

Q CELLS PERFORMANCE WARRANTY

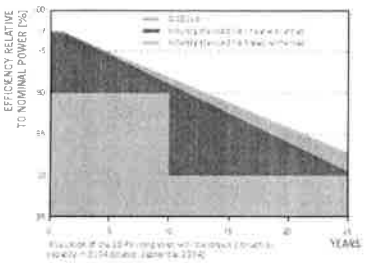

At least 97 % of nominal power during first year. Thereafter max. 0.6 % degradation per year.
At least 92 % of nominal power after 10 years.
At least 83 % of nominal power after 25 years.

All data within measurement tolerances. Full warranties in accordance with the warranty terms of the Q CELLS sales organisation of your respective country.

PERFORMANCE AT LOW IRRADIANCE

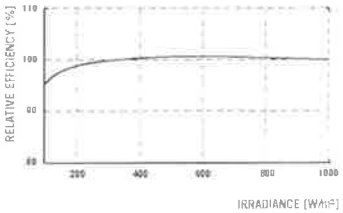

Typical module performance under low irradiance conditions in comparison to STC conditions (25 °C, 1000 W/m²)

TEMPERATURE COEFFICIENTS

Temperature Coefficient of I_{SC}	α	[%/K]	+0.04	Temperature Coefficient of V_{OC}	β	[%/K]	-0.29
Temperature Coefficient of P_{MPP}	γ	[%/K]	-0.40	Normal Operating Cell Temperature	NOCT	[°F]	113 ± 5.4 (45 ± 3 °C)

PROPERTIES FOR SYSTEM DESIGN

Maximum System Voltage V_{SYS}	[V]	1500 (IEC) / 1500 (UL)	Safety Class	II
Maximum Series Fuse Rating	[A DC]	15	Fire Rating	C / TYPE 1
Max Load (UL)[2]	[lbs/ft²]	75 (3600 Pa)	Permitted module temperature on continuous duty	-40 °F up to +185 °F (-40 °C up to +85 °C)
Load Rating (UL)[2]	[lbs/ft²]	33 (1600 Pa)	[2] see installation manual	

QUALIFICATIONS AND CERTIFICATES

IEC 61215 (Ed. 2); IEC 61730 (Ed. 1). Application class A
This data sheet complies with DIN EN 50380.

PACKAGING INFORMATION

Number of Modules per Pallet	29
Number of Pallets per 40' Container	22
Pallet Dimensions (L × W × H)	81.3 × 45.3 × 46.9 in (2065 × 1150 × 1190 mm)
Pallet Weight	1671 lbs (758 kg)

NOTE: Installation instructions must be followed. See the installation and operating manual or contact our technical service department for further information on approved installation and use of this product.

Hanwha Q CELLS USA Corp.
300 Spectrum Center Drive, Suite 1250, Irvine, CA 92618, USA | TEL +1 949 748 59 96 | WEB www.q-cells.com

Engineered in **Germany**

Q CELLS

Specifications subject to technical changes. © Hanwha Q CELLS Q.PLUS L-G4.2_330-340_2015-09_Rev03_NA

Block diagram of MICRO-0.25/0.3/0.3HV-I-OUTD

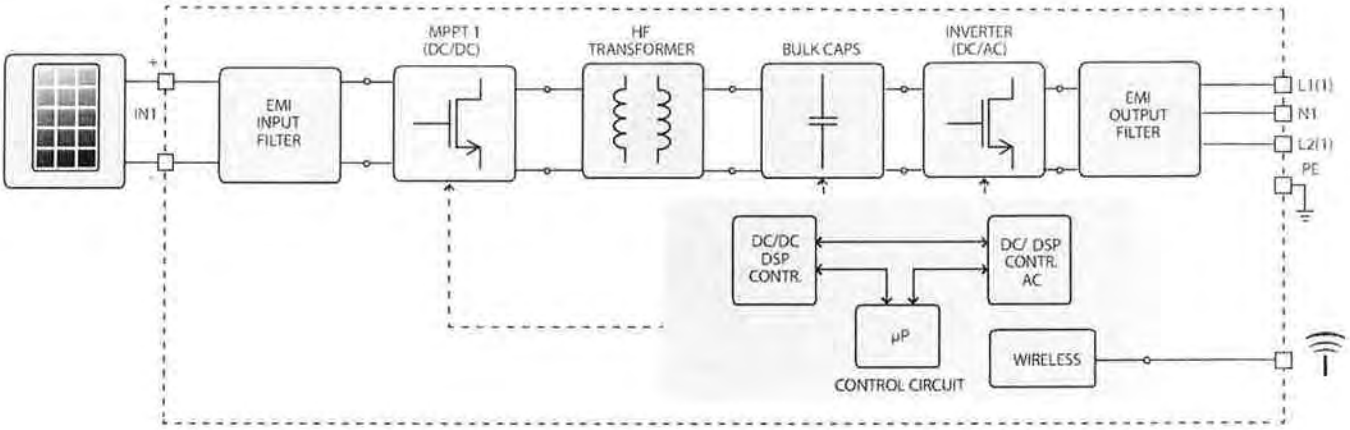

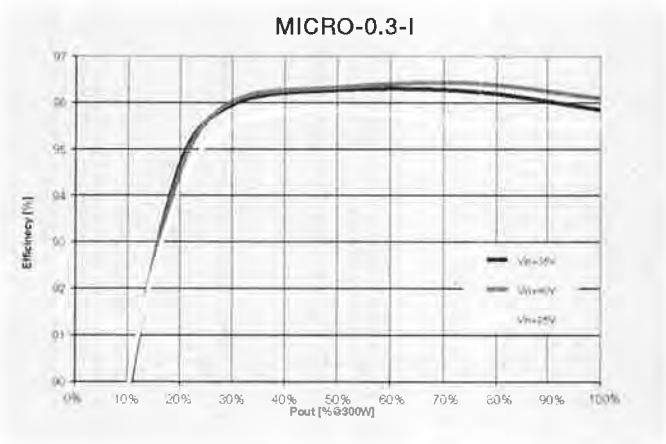

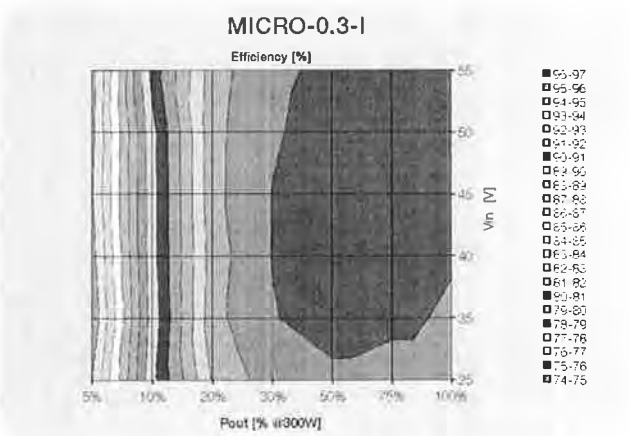

MICRO inverter system installation:

- The ABB MICRO inverter offers ease of installation with AC trunk and drop cable configuration.
- The mounting bracket on the MICRO inverter ensures simple and durable mounting on commercially available racking solutions.
- AC cabling compatible with 60, 72 and 96 cell modules in both portrait and landscape orientation.
- Locking connectors and weatherproof accessories ensure long term reliable operation of the plant.

System installation

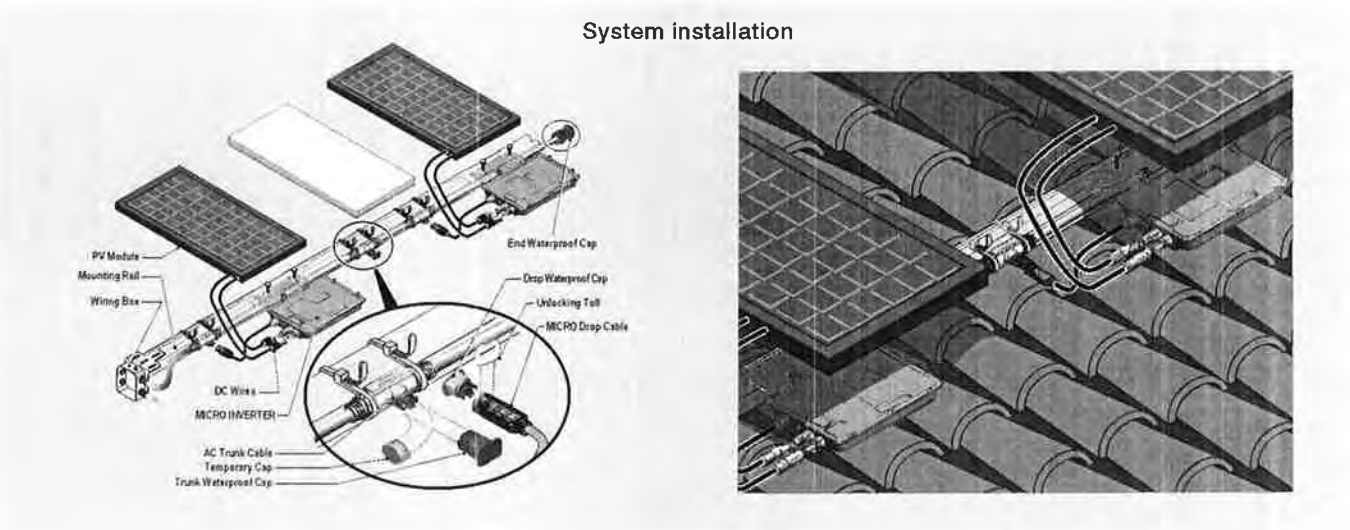

MEMORANDUM

November 15, 2016

To: Plan Commission
Cc: Village Manager Chris Swartz
Village Attorney Nathan Bayer

From: Planning Director Ericka Lang

RE: Conditional Use for Solar Panel 3535 N. Hackett Street

Agenda Item #: Consideration of Solar Panel CUP

On October 18, 2016 the village received a conditional use application for installation of solar panels at residential property 3535 N. Hackett St. The property owner is Jason Bucciarelli and the applicant is Arch Electric Inc.

Panel Description
The application is for 13 solar modules mounted on the south roof elevation of the house.

Code
Per 535-30D, installation and use of solar energy systems are a conditional use in all districts. The full code is attached. It also says that your commission shall review the proposed system and may only restrict if one of the following conditions is satisfied:

> [1] Serves to preserve or protect the public health or safety.
> [2] Does not significantly increase the cost of the system or significantly decrease its efficiency.
> [3] Allows for an alternative system of comparable cost and efficiency.

The review and approval criteria in 535-30D apply to solar and wind energy systems.

APPLICATION FOR CONDITIONAL USE PERMIT

Village of Shorewood
Planning & Development Department
3930 N. Murray Avenue
Shorewood, WI 53211
Phone (414) 847-2640
Facsimile (414) 847-2648
www.villageofshorewood.org
PAD@villageofshorewood.org

Office Use Only	
General Fee $125	Solar Energy Fee $75
Permit No. 16-2129	
Zoning District R-5	
CUP Reason solar panels	
Code Reference 535-30D	
Plan Comm. Meeting 11-22-2016	
Outcome	

CONDITIONAL USE APPLICATIONS ARE CONSIDERED BY THE PLAN COMMISSION. MEETINGS ARE THE 4TH TUESDAY EACH MONTH, AS NEEDED. APPLICATIONS ARE DUE 4 WEEKS BEFORE SCHEDULED MEETINGS AND ADDITIONAL MATERIALS AS IDENTIFIED BY THE PLANNING & DEVELOPMENT DEPARTMENT.

PROPERTY ADDRESS: 3535 N. Hackett St.

PROPERTY OWNER

Owner Name: Jason Bucciarelli
Phone Number: 414-731-0212
Email: JSABUCCIARELLI@YAHOO.COM

Owner Address: 3535 N. Hackett St.
Shorewood, WI 53211

APPLICANT/BUSINESS

Name: Arch Electric Inc.
Phone Number: 920-893-8388
Email: jen@archelec.com

Address:
1237 Pilgrim Rd. Ste 201
Plymouth, WI 53073

Check if prefer to receive Meeting Agenda by EMAIL: X PROPERTY OWNER X APPLICANT

BUSINESS INFORMATION

Name of Business Arch Electric Inc. Max # Employees On-site 4

Is a survey attached? (if required)

Is a parking plan attached? (if required)

*Provide copy of business plan

What do you wish to do that will require a Conditional Use Permit?
Install a fixed roof mounted 13 panel 8.78 KW Solar PV System

SIGNATURE

10/8-16
DATE

2/2016

03/14/2011

Property Viewer

Parcels, Addresses, Landuse and Zoning

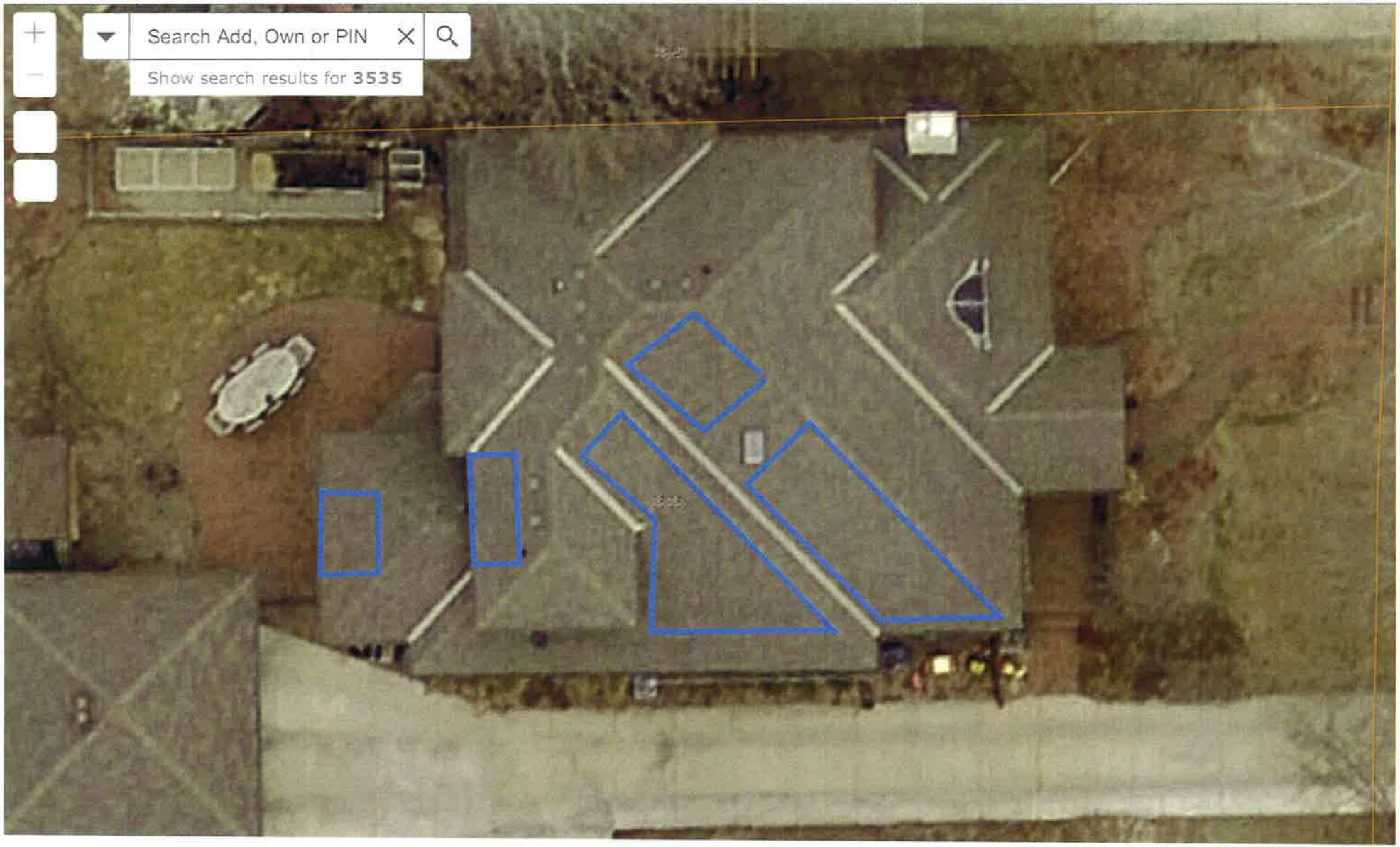

10ft

3535 Hackett

October 19, 2016

1:564

0 0.0045 0.009 0.018 mi

0 0.005 0.01 0.02 km

Address Numbers

Parcels

Streets

Milwaukee County Land Information Office

Web AppBuilder for ArcGIS
Milwaukee County Land Information Office |

3535 Hackett

North

05/02/2016

UNIRAC

U-BUILDER PROJECT REPORT
VERSION: 1.4.31

SEP 23, 2016, 07:48 PM

PROJECT TITLE: JASON BUCCIARELLI
PROJECT ID: 3C729AF3

		Designed by
Name:	Jason Bucciarelli	Russel@archelec.com
Address:	3535 N Hackett Ave Shorewood Wi 53211	SOLARMOUNT-LT
City, State:	Milwaukee, WI, 53211	27 - 325 Watt Panels
Module:	Panasonic VBHN 325 SA15	487 Sq Ft.
	325 Watts	8.8 kWs

ENGINEERING REPORT

Plan review

Loads Used for Design	
- Building Code:	ASCE 7-05
- Wind Speed:	90 mph
- Ground Snow Load:	30 psf
- Seismic (Ss):	0.09
- Wind Exposure:	B
Loads Determined by Zip	
- City, State:	Milwaukee, WI
- Wind Speed:	90 mph
- Ground Snow Load:	30 psf

Inspection

Product:	SOLARMOUNT-LT
Module Manufacturer:	Panasonic
Model:	VBHN 325 SA15
Module Watts:	325 watts
Module Length:	62.60 "
Module Width:	41.46 "
Module Thickness:	1.38 "
Expansion Joints:	Every 40'
Rails Direction:	EW
Building Height:	30 ft.
Roof Type:	Shingle
Total Weight:	1201.92 lbs

WORKSPACE 1

Roof Point Load Up:	-102 lbs	**Maximum Rail Span (Zone 1):**	60"
Roof Point Load Down:	267 lbs	**Selected Rail Span:**	48"
		Maximum Rail Cantilever:	16.00 "
Total Number of Modules:	27	**Roof Pitch:**	6:12
Total KW:	8.8 KW		
Rows/ Columns:	3 / 9 (no gaps)		
NS Dimension:	~15.7 ft		
EW Dimension:	~31.5 ft		

UNIRAC

U-BUILDER PROJECT REPORT
VERSION: 1.4.31

SEP 23, 2016, 07:48 PM

PROJECT TITLE: JASON BUCCIARELLI
PROJECT ID: 3C729AF3

		Designed by
Name:	Jason Bucciarelli	Russel@archelec.com
Address:	3535 N Hackett Ave Shorewood Wi 53211	SOLARMOUNT-LT
City, State:	Milwaukee, WI, 53211	27 - 325 Watt Panels
Module:	Panasonic VBHN 325 SA15	487 Sq Ft.
	325 Watts	8.8 kWs

INSTALLATION AND DESIGN PLAN

LAYOUT WORKSPACE 1

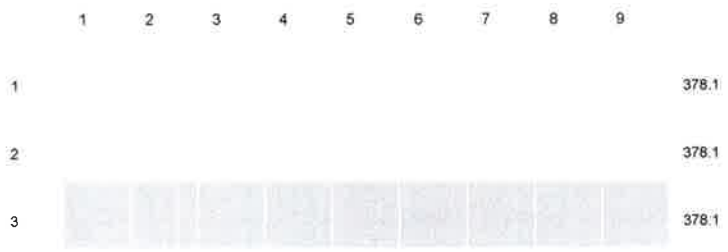

Array vertical dimension: 187.8

Array horizontal dimension: 378.1

Row	Modules	Zone	Rail Type	Splices	Roof Attachments
1	9	Zone 1	SM LIGHT RAIL 168" MILL | 315168M | $50 (2) SM LIGHT RAIL 240" MILL | 315240M | $72 (2)	2	18
2	9	Zone 1	SM LIGHT RAIL 168" MILL | 315168M | $50 (2) SM LIGHT RAIL 240" MILL | 315240M | $72 (2)	2	18
3	9	Zone 2	SM LIGHT RAIL 168" MILL | 315168M | $50 (2) SM LIGHT RAIL 240" MILL | 315240M | $72 (2)	2	32

Maximum Rail Span (Zone 1*):	60.00"
Selected Rail Span:	48.00"
Maximum Rail Cantilever:	16.00"
Module Orientation:	Portrait
Rail Direction:	EW

*Zone 2 and 3 Rail Spans must be independently verified

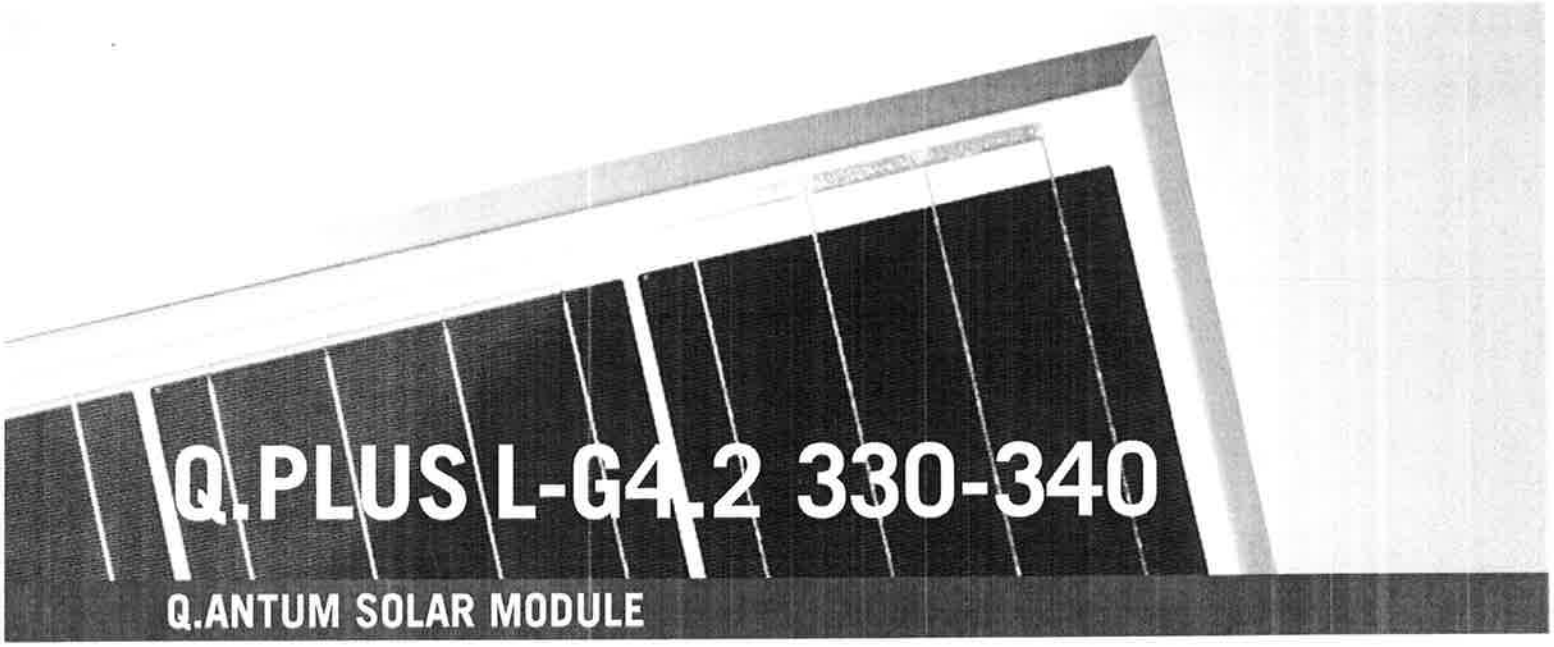

Q.PLUS L-G4.2 330-340

Q.ANTUM SOLAR MODULE

The Q.ANTUM solar module Q.PLUS L-G4.2 with power classes up to 340 Wp is the strongest module of its type on the market globally. Powered by 72 Q CELLS solar cells Q.PLUS L-G4.2 was specially designed for large solar power plants to reduce BOS costs. Only Q CELLS offers German engineering quality with our unique triple Yield Security.

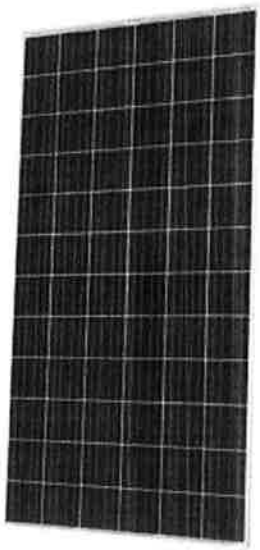

LOW ELECTRICITY GENERATION COSTS

Higher yield per surface area and lower BOS costs thanks to higher power classes and an efficiency rate of up to 17.4 %.

INNOVATIVE ALL-WEATHER TECHNOLOGY

Optimal yields, whatever the weather with excellent low-light and temperature behavior.

ENDURING HIGH PERFORMANCE

Long-term yield security with Anti-PID Technology[1], Hot-Spot-Protect and Traceable Quality Tra.Q™.

LIGHT-WEIGHT QUALITY FRAME

High-tech aluminum alloy frame, certified for high snow (5400 Pa) and wind loads (2400 Pa).

A RELIABLE INVESTMENT

Inclusive 12-year product warranty and 25-year linear performance guarantee[2].

EUPD RESEARCH TOP BRAND PV MODULES 2015

Q CELLS YIELD SECURITY
ANTI PID TECHNOLOGY (APT)
HOT-SPOT PROTECT (HSP)
TRACEABLE QUALITY (TRA.Q™)

Photon
Q CELLS
Best polycrystalline solar module 2013
Q.PRO-G2 235
151 modules tested

[1] APT test conditions: Cells at -1000 V against grounded, with conductive metal foil covered module surface, 25 °C, 168 h

[2] See data sheet on rear for further information.

THE IDEAL SOLUTION FOR:

Ground-mounted solar power plants

Engineered in **Germany**

Q CELLS

Block diagram of MICRO-0.25/0.3/0.3HV-I-OUTD

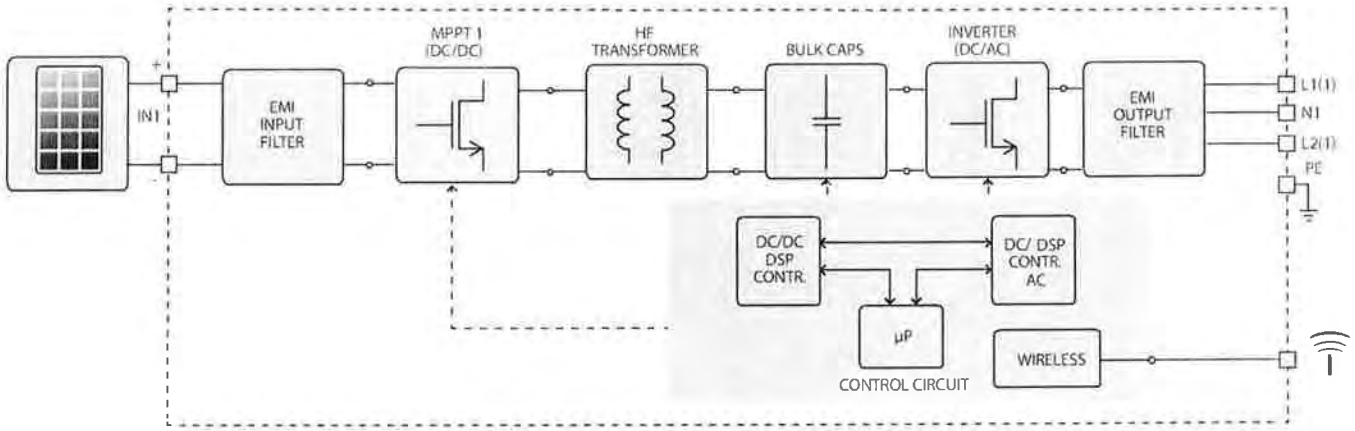

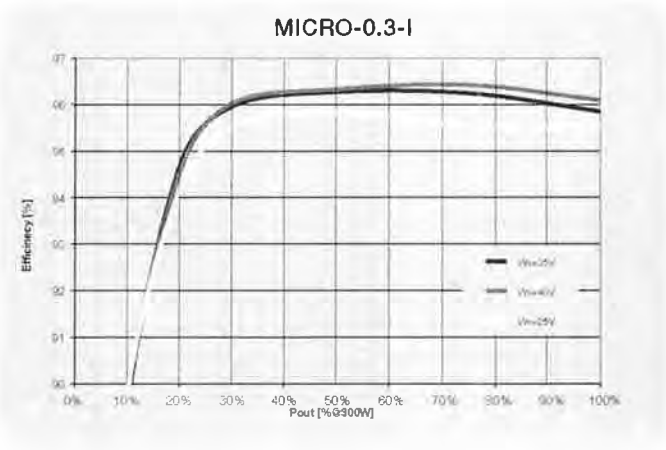

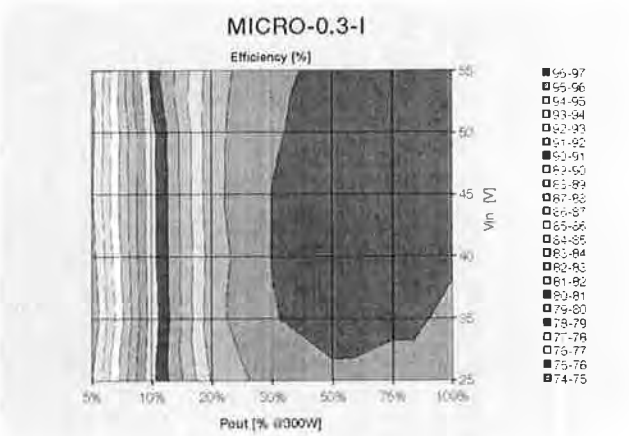

MICRO inverter system installation:

- The ABB MICRO inverter offers ease of installation with AC trunk and drop cable configuration.
- The mounting bracket on the MICRO inverter ensures simple and durable mounting on commercially available racking solutions.
- AC cabling compatible with 60, 72 and 96 cell modules in both portrait and landscape orientation.
- Locking connectors and weatherproof accessories ensure long term reliable operation of the plant.

System installation

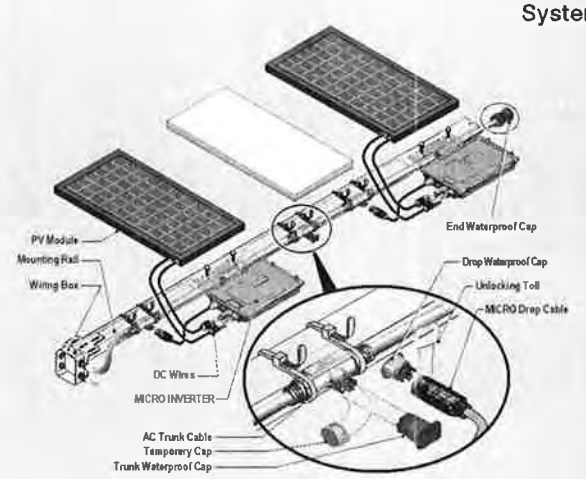

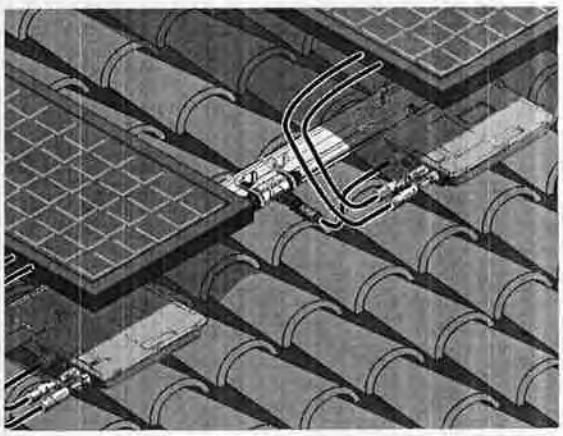

Shorewood

Report Plan Commission November 15, 2016

Prepared by: Planning Director Ericka Lang

RE: Conditional Use for Solar Panel 4240 N. Ardmore Street

On October 19, 2016 the village received a conditional use application for installation of solar panels at residential property 3535 N. Hackett St. The property owner is Murray Blackmore and the applicant is Arch Electric Inc.

Panel Description
The application is for 8 solar modules mounted. An exact location of the panels was not provided.

Zoning Code
Per 535-30D, installation and use of solar energy systems are a conditional use in all districts. The full code is attached. It also says that your commission shall review the proposed system and may only restrict if one of the following conditions is satisfied:

> [1] Serves to preserve or protect the public health or safety.
> [2] Does not significantly increase the cost of the system or significantly decrease its efficiency.
> [3] Allows for an alternative system of comparable cost and efficiency.

The review and approval criteria in 535-30D apply to solar and wind energy systems.

APPLICATION FOR CONDITIONAL USE PERMIT

Village of Shorewood
Planning & Development Department
3930 N. Murray Avenue
Shorewood, WI 53211
Phone (414) 847-2640
Facsimile (414) 847-2648
www.villageofshorewood.org
PAD@villageofshorewood.org

Office Use Only	
General Fee $125	Solar Energy Fee $75
Permit No. 16-2145	
Zoning District R-6	
CUP Reason solar panels	
Code Reference 535-30	
Plan Comm. Meeting 11-22-2016	
Outcome	

CONDITIONAL USE APPLICATIONS ARE CONSIDERED BY THE PLAN COMMISSION. MEETINGS ARE THE 4TH TUESDAY EACH MONTH, AS NEEDED. APPLICATIONS ARE DUE 4 WEEKS BEFORE SCHEDULED MEETINGS AND ADDITIONAL MATERIALS AS IDENTIFIED BY THE PLANNING & DEVELOPMENT DEPARTMENT.

PROPERTY ADDRESS: 4240 N Admore St.

PROPERTY OWNER

Owner Name: Murray Blackmore
Phone Number: 786-327-7176
Email: RANDYJOOS@HOTMAIL.COM
Owner Address: 4240 N Admore St.
Shorewood, WI 53211

APPLICANT/BUSINESS

Name: Arch Electric Inc.
Phone Number: 920-893-8388
Email: jen@archelec.com
Address:
1237 Pilgrim Rd. Ste 201
Plymouth, WI 53073

Check if prefer to receive Meeting Agenda by EMAIL: X PROPERTY OWNER X APPLICANT

BUSINESS INFORMATION

Name of Business Arch Electric Inc. Max # Employees On-site 4

Is a survey attached? (if required)

Is a parking plan attached? (if required)

*Provide copy of business plan

What do you wish to do that will require a Conditional Use Permit?
Install a fixed roof mounted 8 panel 2.64 KW Solar PV System

Jen Simmons
SIGNATURE

10/17/16
DATE

2/2016

4240 Ardmore

November 15, 2016

Address Numbers

Parcels

Streets

1:282

0 0.00225 0.0045 0.009 mi

0 0.0025 0.005 0.01 km

Milwaukee County Land Information Office

Web AppBuilder for ArcGIS
Milwaukee County Land Information Office |

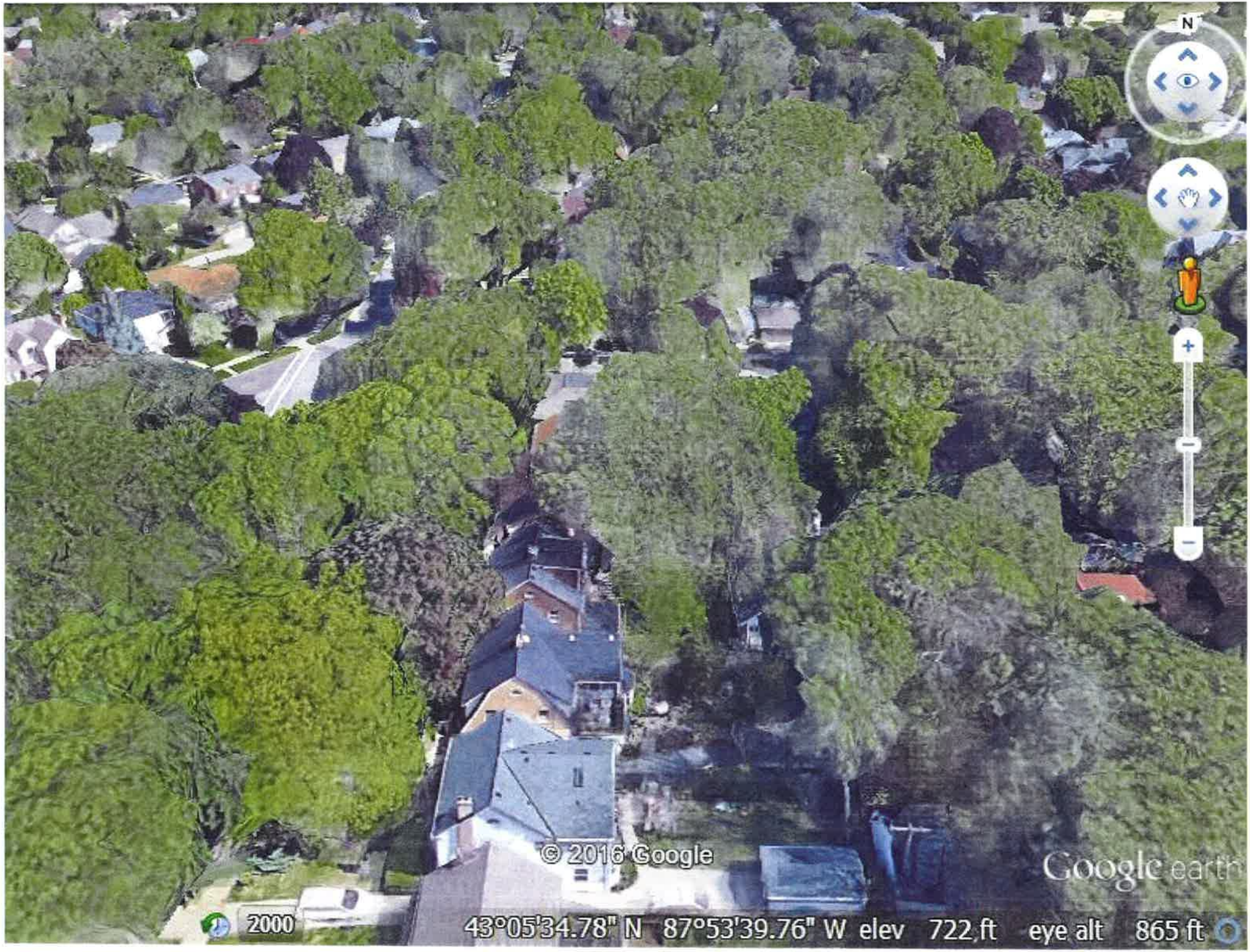
N
© 2016 Google
Google earth
2000
43°05'34.78" N 87°53'39.76" W elev 722 ft eye alt 865 ft

UNIRAC

U-BUILDER PROJECT REPORT
VERSION: 1.3.5

SEP 08, 2016, 11:49 AM

PROJECT TITLE: MAURY BLACKMORE
PROJECT ID: 024D5F5A

		Designed by
Name:	Maury Blackmore	Russel@archelec.com
Address:	4240 N Ardmore Ave Shorewood Wi 53211	SOLARMOUNT
City, State:	Milwaukee, WI, 53211	8 - 330 Watt Panels
Module:	Hanwha Solar Q-PLUS-G4.2 330	172 Sq Ft.
	330 Watts	2.6 kWs

ENGINEERING REPORT

Plan review

Loads Used for Design	
- Building Code:	ASCE 7-05
- Wind Speed:	90 mph
- Ground Snow Load:	30 psf
- Seismic (Ss):	0.09
- Wind Exposure:	B
Loads Determined by Zip	
- City, State:	Milwaukee, WI
- Wind Speed:	90 mph
- Ground Snow Load:	30 psf

Inspection

Product:	SOLARMOUNT
Module Manufacturer:	Hanwha Solar
Model:	Q-PLUS-G4.2 330
Module Watts:	330 watts
Module Length:	78.50 "
Module Width:	39.40 "
Module Thickness:	1.38 "
Expansion Joints:	Every 40'
Rails Direction:	EW
Building Height:	30 ft.
Roof Type:	Shingle
Total Weight:	423.20 lbs

WORKSPACE 1

Roof Point Load Up:	-147 lbs	**Maximum Rail Span (Zone 1):**	51"
Roof Point Load Down:	245 lbs	**Selected Rail Span:**	48"
		Maximum Rail Cantilever:	16.00 "
Total Number of Modules:	8	**Roof Pitch:**	12:12
Total KW:	2.6 KW		
Rows/ Columns:	2 / 4 (no gaps)		
NS Dimension:	~13.1 ft		
EW Dimension:	~13.4 ft		

UNIRAC

U-BUILDER PROJECT REPORT
VERSION: 1.3.5

SEP 08, 2016, 11:49 AM

PROJECT TITLE: MAURY BLACKMORE
PROJECT ID: 024D5F5A

		Designed by
Name:	Maury Blackmore	Russel@archelec.com
Address:	4240 N Ardmore Ave Shorewood Wi 53211	SOLARMOUNT
City, State:	Milwaukee, WI, 53211	8 - 330 Watt Panels
Module:	Hanwha Solar Q-PLUS-G4.2 330	172 Sq Ft.
	330 Watts	2.6 kWs

INSTALLATION AND DESIGN PLAN

LAYOUT WORKSPACE 1

Array vertical dimension: 157.0

Array horizontal dimension: 161.3

Row	Modules	Zone	Rail Type	Splices	Roof Attachments
1	4	Zone 1	SM RAIL 168" MILL | 320168M | $70 (2)	0	8
2	4	Zone 2	SM RAIL 168" MILL | 320168M | $70 (2)	0	16

Maximum Rail Span (Zone 1*):	51.00"
Selected Rail Span:	48.00"
Maximum Rail Cantilever:	16.00"
Module Orientation:	Portrait
Rail Direction:	EW

*Zone 2 and 3 Rail Spans must be independently verified

Report to Plan Commission **November 15, 2016**

Prepared by: Planning Director Ericka Lang

RE: 1700 E. River Park Court Antenna Conditional Use Application

An antenna application was received from LCC Telecom Services on behalf T-Mobile to install six new telecommunication antennas on the roof of the multifamily building at 1700 E. River Park Court. As the materials show, the antennas and related equipment will be located on three corners of the nine-story building: at the southwest, southeast and northwest corners.

Referring to page A-2 east building elevation, the building has nearly a four-foot parapet wall and the antennas appears to extent four-feet above the parapet wall. Material pages A-5 and S-1 detail a chain linked fence that appears to be within the penthouse and not visible from the street.

Per zoning code 535-30C, wireless telecommunications and mobile wireless facilities require conditional use approval by the Plan Commission who must make the findings under 535-30C(5)[d]. The exact same criteria apply regardless of whether the conditional use is for a “class 1 collocation” or a class 2 collocation.”

In 2015 the Plan Commission considered a like conditional application for another tall building in Shorewood. In the packet, Village Attorney provided a memorandum dated October 27, 2015 regarding Wisconsin Statutes relating to mobile service facilities. I’ve included that memo and related codes in your packet.

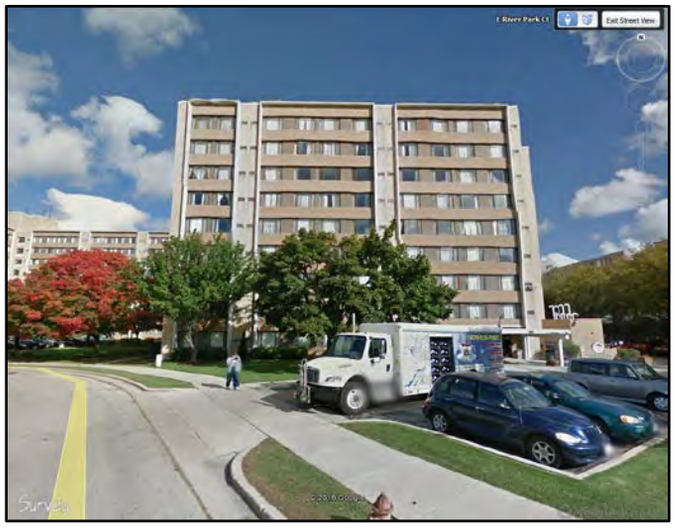

View of the property facing north.

View of the property facing east.

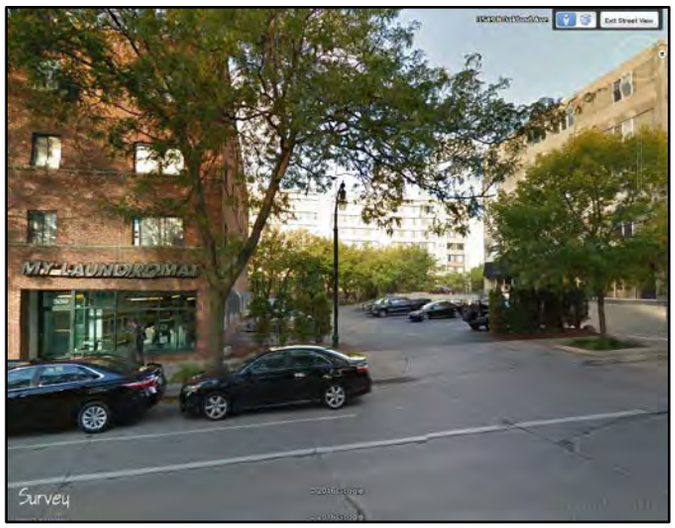

View toward the property from N Oakland Ave, facing W.

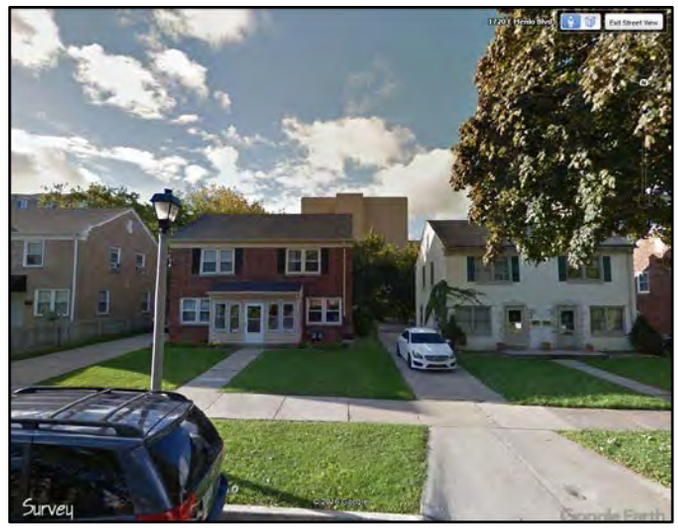

View toward the property from E Menlo Blvd, facing S.

View away from the property along N Oakland Ave, facing E.

View from the property facing south.

PROPERTY PHOTOGRAPHS

1700 EAST RIVER PARK COURT
SHOREWOOD (VILLAGE OF SHOREWOOD), WISCONSIN 53211
MILWAUKEE COUNTY

Village Attorney's Office

Nathan J. Bayer
William P. Dineen

MEMORANDUM

TO: Planning Commission

FROM: Village Attorney Nathan J. Bayer

DATE: October 27, 2015

RE: Applications for Conditional Use Permits for Telecommunications Antennas

---

The agenda for the October 27, 2015 plan commission meeting includes consideration of an application for a conditional use permit, submitted by Verizon Wireless, to replace 3 antennas, and install 3 new antennas, on the roof of the apartment building at 3909 N Murray Avenue.

The Wisconsin Legislature has limited the criteria upon which local municipalities may deny conditional uses relating to a "mobile service facility," which is defined to include antennas. The applicable statute is Wis. Stat. § 66.0404.

Shorewood's ordinances were amended in 2014 to comply with all of the limitations and requirements enumerated in Wis. Stat. § 66.0404. The applicable Shorewood Village Code section is 535-30, titled "Architectural Projections, Special Structures, Mobile Wireless Towers and Solar and Wind Energy Systems." The statute and the ordinance distinguish between what is known as a "class 1 collocation" and a "class 2 collocation." The request here constitutes class 2 collocation is defined by the statute as follows:

> "Class 2 collocation" means the placement of a new mobile service facility on an existing support structure such that the owner of the facility does not need to construct a free standing support structure for the facility or engage in substantial modification.

The definition of "support structure" includes the building at 3909 N Murray Avenue on which these antennas are situated.

A request for a conditional use for a class 2 collocation must be acted on within 45 days after an application is submitted. The application enclosed with the agenda packet is dated September 11, 2015. However, the application was not completed until October 20, 2015, and thus the Planning Commission has appropriate jurisdiction over the application, and a decision must be made on or before December 4, 2015.

The application is governed by Village Code § 535-30(5)(d). It reads as follows:

Village of Shorewood
Date 11/04/2016 12:48:19 PM
Ref 00027913
Receipt 125771
Amount $125.00

MT91205A

Shorewood

APPLICATION FOR CONDITIONAL USE PERMIT

Village of Shorewood 27913
Planning & Development Department
3930 N. Murray Avenue
Shorewood, WI 53211
Phone (414) 847-2640
Facsimile (414) 847-2648
www.villageofshorewood.org
PAD@villageofshorewood.org

Office Use Only

Fee $125	**Tax ID**
Permit No.	16-2274
Zoning District	PDD
CUP Reason	
Code	535-30
Plan Comm. Meeting	11-22-16

CONDITIONAL USE APPLICATIONS ARE CONSIDERED BY THE PLAN COMMISSION. MEETINGS ARE THE 4TH TUESDAY EACH MONTH, AS NEEDED. APPLICATIONS ARE DUE 4 WEEKS BEFORE SCHEDULED MEETINGS AND ADDITIONAL MATERIALS AS IDENTIFIED BY THE PLANNING & DEVELOPMENT DEPARTMENT.

PROPERTY ADDRESS: 1700 E. River Park Court, Shorewood, WI 53211

PROPERTY OWNER

Owner Name: River Park Development Co.
Owner Address: 1665 N. Water St. Milwaukee, WI 53202
Phone Number: (414) 276-5285
Email:

APPLICANT/BUSINESS

Owner Name: LCC Telecom Services applicant on behalf of T-Mobile
Owner Address:
Phone Number: (847) 380-4833
Email: ELaugesen@LCCTelecom.com

BUSINESS INFORMATION

Name of Business
Number of employees N/A - Unmanned facility
Is a survey attached? (if required) N/A
Is a parking plan attached? (if required) N/A

What do you wish to do that will require a Conditional Use Permit?

Install (6) new antennas, (2) per sector, on (3) new rooftop sled mounts. Equipment racks to be placed inside of penthouse.

SIGNATURE

DATE 10/25/16

Eric Laugesen
PRINT NAME

REV-11-2012

(d) The Village Plan Commission shall review the application and consider a conditional use under the following conditions:

[1] **Within 45 days** of submitting the application for conditional use permit under Subsection C(3), it shall be submitted to the Plan Commission for consideration, hearing, decision and issuance of permit.

[2] The Plan Commission shall give public notice of the time and place of the hearing and due notice to the applicant. The applicant may appear in person or by agent or attorney.

[3] Applications for conditional uses under this section shall be subject to the procedures, requirements and criteria contained within Article V of Chapter 535, Zoning, except as modified by this section.

[4] In granting a conditional use permit, the Plan Commission may impose conditions consistent with the purpose of this section when the Commission concludes such conditions necessary.

[5] The Village Plan Commission may consider the criteria for the grant of a conditional use permit as contained within § 535-25C(1) through (7).

[6] The Commission shall not deny a conditional use permit:

[a] Based on the health or environment effects of radio frequency emissions to the extent that the applicant proves compliance with FCC rules and regulations; or

[b] Based on aesthetic concerns, the height of the mobile service support structure or on whether the structure requires lighting.

[7] The Plan Commission will make a final decision to approve or deny the applicant and notify the applicant in writing of its final decision. A denial of a request for a conditional use permit under this section shall be in writing and supported by substantial evidence as contained within the record of proceedings.

I have highlighted criteria that the commission may not apply.

Each of these ordinances also adopt by reference the criterial laid out in § 535-25C(1)-(7). Thus, I am also including that here as well:

C. No conditional use permit shall be authorized by the Plan Commission unless such Commission shall find that:

(1) The establishment, maintenance or operation of the conditional use will not be detrimental to or endanger the public health, safety, morals, comfort or general welfare.

(2) The conditional use will not be injurious to the use and enjoyment of other property in the immediate vicinity for the purposes already permitted nor substantially diminish or impair property values within the neighborhood.

(3) The establishment of the conditional use will not impede the normal and orderly development and improvement of the surrounding property for uses permitted in the district or have a negative impact on the diversity of the type of businesses located in the district.
[Amended 3-18-1991 by Ord. No. 1599]

(4) Adequate utilities, access roads, drainage and/or necessary facilities have been or are being provided.

(5) Adequate measures have been or will be taken to provide ingress and egress so designed as to minimize traffic congestion in the public streets.

(6) The conditional use shall, in all other respects, conform to the applicable regulations of the district in which it is located, except as such regulations may, in each instance, be modified by the Board of Trustees pursuant to the recommendations of the Plan Commission.

(7) The conditional use is in accordance with and subject to all other applicable laws and regulations.

Please let me know if you have any questions.

The following code does not display images or complicated formatting. Codes should be viewed online. This tool is only meant for editing.

§ 535-30 **Architectural projections, special structures, mobile wireless towers and solar and wind energy systems.**

[Amended 12-1-2014 by Ord. No. 2050; 2-17-2015 by Ord. No. 2052]

A. Architectural projections, such as spires, belfries, parapet walls, cupolas, domes, flues and chimneys, are conditional uses in all districts if they exceed the height limitations of this chapter.

B. Special structures, such as elevator penthouses, scenery lofts, manufacturing equipment and necessary mechanical appurtenances, cooling towers, substations, smokestacks, wind-powered generators and solar energy devices, are conditional uses.

C. Wireless telecommunications and mobile wireless facilities.

(1) Purpose. In order to accommodate the communication needs of residents and businesses while protecting the public health, safety and general welfare of the community, these regulations are necessary in order to:

(a) Facilitate the provision of wireless telecommunication services to the residents and businesses of the Village;

(b) Minimize adverse visual effects of towers through careful design and siting standards;

(c) Avoid potential damage to adjacent properties from tower failure through structural standards and setback requirements;

(d) Maximize the use of existing towers and buildings to accommodate new wireless telecommunication antennas in order to reduce the number of towers needed to serve the community and encourage co-location;

(e) Encourage the location of towers in nonresidential areas and minimize the total number of towers throughout the Village; and

(f) Regulate mobile service facilities to the extent allowed by § 66.0404, Wis. Stats., and other applicable laws.

(2) Definitions. All terms used in this section shall have the meaning described and used in § 66.0404(1), Wis. Stats.

(3) Permits required.

(a) Except as hereinafter noted, it shall be unlawful for any person, firm or corporation to place, erect, construct or relocate within the Village of Shorewood any wireless telecommunications equipment or mobile wireless facilities without first applying for and obtaining:

[1] A conditional use permit granted under Article **V** of Chapter **535**, Zoning, and this section.

[2] A building permit and electrical permit for the construction of the antenna and supporting or accessory structures.

(4) New construction and substantial modification of facilities and support structures.

(a) An application for a permit to engage in the siting or construction of a new mobile service support structure and facilities or to engage in a Class 1 co-location shall be submitted in writing to the Planning and Development Department and shall contain the following:

[1] The name and business address of, and the contact individual for, the applicant.

[2] The location of the proposed or affected support structure.

[3] The location of the proposed mobile service facility.

[4] If the application is to substantially modify an existing support structure, a construction plan which describes the proposed modifications to the support structure and the equipment and network components, including antennas, transmitters, receivers, base stations, power supplies, cabling, and related equipment associated with the proposed modifications.

[5] If the application is to construct a new mobile service support structure, a construction plan which describes the proposed mobile service support structure and the equipment and network components, including antennas, transmitters, receivers, base stations, power supplies, cabling, and related equipment to be placed on or around the new mobile service support structure.

[6] If an application is to construct a new mobile service support structure, an explanation as to why the applicant chose the proposed location and why the applicant did not choose collocation, including a sworn statement from an individual who has a responsibility over the placement of the mobile service support structure attesting that collocation within the applicant's search ring would not result in the same mobile service functionality, coverage, and capacity; is technically infeasible; or is economically burdensome to the mobile service provider.

(b) Determination of completeness within 10 days of submittal.

[1] The Director of Planning and Development Department or the Designee shall review the application and determine whether the application is complete. If the application includes all of the foregoing information, the application shall be found to be complete. The Village shall notify the applicant in writing within 10 days of receiving the application if it is found not to be complete and such notice shall specify in detail the required information that was incomplete. Applicants are allowed to resubmit their applications as often as necessary until it is complete.

(c) Permit fees. The applicant shall pay the fee as enumerated within the Village Fee Schedule.

(d) The Village Plan Commission shall review the application and consider a conditional use permit under the following conditions:

[1] Within 90 days of submitting the application for conditional use permit under Subsection **C(3)**, it shall be submitted to the Plan Commission for consideration, hearing, decision and issuance of permit.

[2] The Plan Commission shall give public notice of the time and place of the hearing and due notice to the applicant. The applicant may appear in person or by agent or attorney.

[3] Applications for conditional uses under this section shall be subject to the procedures, requirements and criteria contained within Article **V** of Chapter **535**, Zoning, except as modified by this section.

[4] In granting a conditional use permit, the Plan Commission may impose conditions consistent with the purpose of this section when the Commission concludes such conditions may be necessary.

[5] The Village Plan Commission may consider the criteria for the grant of a conditional use permit as contained within § **535-25C(1)** through **(7)**.

[6] The Commission shall not deny a conditional use permit:

[a] Based on the health or environment effects of radio frequency emissions to the extent that the applicant proves compliance with FCC rules and regulations; or

[b] Based solely on aesthetic concerns, the height of the mobile service support structure or on whether the structure requires lighting.

[7] The Plan Commission will make a final decision to approve or deny the applicant and notify the applicant in writing of its final decision. A denial of a request for a conditional use permit under this section shall be in writing and supported by substantial evidence as contained within the record of proceedings.

(5) Co-located and multiple-user facilities.

(a) An application for a permit to engage in Class 2 co-location shall be submitted in writing to the Planning and Development Department and shall contain the following:

[1] The name and business address of, and the contact individual for, the applicant.

[2] The location of the proposed or affected support structure.

[3] The location of the proposed mobile service facility.

(b) Determination of completeness within five days of submittal. The Director of the Planning and Development Department or the Director's designee shall review the application and determine whether the application is complete. If the application includes all of the foregoing information, the application shall be found to be complete. The Village shall notify the applicant in writing within five days of receiving the application if it is found not to be complete, and such notice shall specify in detail the required information that was incomplete. Applicants are allowed to resubmit their application as often as necessary until it is complete.

(c) Permit fees. The applicant shall pay the fee as enumerated within the Village Fee Schedule.

(d) **The Village Plan Commission shall review the application and consider a conditional use under the following conditions:**

[1] Within 45 days of submitting the application for conditional use permit under Subsection C(3), it shall be submitted to the Plan Commission for consideration, hearing, decision and issuance of permit.

[2] The Plan Commission shall give public notice of the time and place of the hearing and due notice to the applicant. The applicant may appear in person or by agent or attorney.

[3] Applications for conditional uses under this section shall be subject to the procedures, requirements and criteria contained within Article V of Chapter 535, Zoning, except as modified by this section.

[4] In granting a conditional use permit, the Plan Commission may impose conditions consistent with the purpose of this section when the Commission concludes such conditions necessary.

[5] The Village Plan Commission may consider the criteria for the grant of a conditional use permit as contained within § 535-25C(1) through (7).

[6] The Commission shall not deny a conditional use permit:

[a] Based on the health or environment effects of radio frequency emissions to the extent that the applicant proves compliance with FCC rules and regulations; or

[b] Based on aesthetic concerns, the height of the mobile service support structure or on whether the structure requires lighting.

[7] The Plan Commission will make a final decision to approve or deny the applicant and notify the applicant in writing of its final decision. A denial of a request for a conditional use permit under this section shall be in writing and supported by substantial evidence as contained within the record of proceedings.

(6) Waiver. The Plan Commission may, in its discretion, waive compliance with provisions within this section where the applicant provides specific engineering and technical data showing that the code requirements would:

(a) Unreasonably delay or prevent installation, maintenance or use;

(b) Adversely impair reception such that the signal is not of an acceptable quality; or

(c) Unreasonably increase the cost of installation, maintenance or use.

(7) All towers, antennas, mobile service facilities and mobile service support structures shall comply with the following requirements:

(a) Each shall be constructed out of metal or other nonflammable material.

(b) Mobile service support structures towers, guy wires, appurtenant equipment and buildings

shall comply with the yard and set back requirements of the zoning district in which they are located.

(c) Building codes; safety standards. To ensure structural integrity, the owner shall ensure that it is maintained in compliance with standards contained in applicable state or local building codes and the applicable standards that are published by the Electronic Industries Associations or the Wireless Infrastructure Association, as amended from time to time.

(d) Equipment shall be permanently grounded in accordance with the manufacturer's specifications for installation. All installations shall meet the minimum wind load design velocity of 80 miles per hour.

(e) No form of advertising or identification shall be allowed other than the customary manufacturer's identification plates.

(f) Portable or trailer-mounted equipment shall be prohibited; provided, however, that temporary installations for on-site testing and demonstration purposes may be allowed for reasonable periods.

(g) State or federal requirements. All equipment shall meet or exceed current standards and regulations of the FAA, FCC and any other agency of the state or federal government with the authority to regulate the equipment installed. If such standards and regulations are changed, then the owner of an equipment governed by this section shall bring it into compliance with such revised standards and regulations within six months of the effective date of such standards and regulations, unless a different compliance schedule is mandated by the controlling state or federal agency. Failure to bring it into compliance with such revised standards and regulations shall constitute grounds for the removal under Subsection **C(8)**.

(h) Electrical installations in connection with this section, including grounding the system, shall be in accordance with the National Electrical Code, Wisconsin State Electrical Code and instructions of the manufacturer; in cases of conflict, the stricter requirements shall govern.

(i) All cable used to conduct current or signals shall be installed underground, unless adequately screened from public view. The location of all such underground lines, cables and conduits shall be shown on the documents supporting the application for permit.

(j) Equipment shall be filtered or shielded to prevent the emission or reflection of any radio frequency emissions or radiation that would cause interference with practical communication transmissions or broadcast reception on adjacent properties.

(k) Aesthetic considerations. Equipment shall be located and designed to reasonably reduce visual impact upon surrounding properties at street level. The Plan Commission may require appropriate screening and landscaping that does not interfere with reception.

(l) Lighting. Regulated equipment shall not be artificially illuminated unless required by the FAA or other applicable authority. If lighting is required, the lighting alternatives and design chosen must cause the least disturbance to the surrounding views.

(m) The equipment cabinet or structures used in association with equipment regulated under this section shall comply with the following:

[1] If the equipment structure is located on the roof of a building, the area of the equipment structure and other equipment and structures shall not occupy more than 10% of the roof.

[2] Equipment storage buildings or cabinets shall comply with all applicable building codes.

[3] Buildings or cabinets located on the ground must be screened from view by vegetation or landscaping.

(n) Mobile service facilities and mobile service support structures shall insure that sufficient anti-climbing measures have been incorporated into the facility, as needed, to reduce potential for trespass and injury.

(o) No mobile service support structure shall be located in R1 through R7 districts.

(8) Failure to maintain or repair.

(a) The Building Inspector may inspect, at any time, any equipment regulated by this section and located in the Village of Shorewood in order to ascertain whether or not the same is of a safe construction and condition and has been installed in a workmanlike manner in accordance with good engineering practices.

(b) In case any condition is found which might result in danger to life or property, or if the equipment is unsightly or in need of maintenance and repair, the Village Building Inspector or Electrical Inspector is authorized to give written notice to the owner or user at their last known address, citing such condition and requiring corrective action within five days from the date of such notice.

(c) If such conditions are not corrected within such time, the maintenance of any such unsafe or unsightly installation by the owner or user thereof shall be considered unlawful, and the owner or user shall be subject to the penalty hereinafter prescribed.

(d) If, in the opinion of the Building Inspector or the Electrical Inspector, such condition is so dangerous to life and property that immediate removal is required, the Village Building Inspector or Electrical Inspector shall remove or cause to be removed the equipment without further notice to the owner or user thereof and at the owner's expense.

(e) Any equipment regulated by this section that is not operated or used for a continuous twelve-month period shall be considered abandoned and the owner of such abandoned equipment shall remove the same within 90 days thereafter or upon notice from the Building Inspector that the equipment is considered abandoned. Failure to remove the abandoned antenna within 30 days of notice shall be grounds to have the equipment removed at the owner's expense.

(f) The cost of removing equipment under this subsection shall be chargeable to the owner of the property upon which it is located and shall be certified in the proper manner to have said costs levied as special charges against such property and the proper officers of the Village are authorized and directed to enter such charges on the tax roll.

(9) Exempt facilities.

(a) Amateur radio towers owned and operated by a federally licensed amateur radio operator and which meets the following conditions:

[1] No more than one support structure for licensed amateur radio operator is allowed on a parcel.

[2] Sufficient anti-climbing measures have been incorporated into the facility, as needed, to reduce potential for trespass and injury.

(b) Publicly owned and operated telecommunications facilities require in the public interest to provide for and maintain a radio frequency telecommunication system, including digital analog, wireless or electromagnetic waves, for police, fire and other municipal services.

(10) Appeals.

(a) Board of Appeals.

[1] Any person aggrieved by a determination of the Planning and Development Department may appeal of the Board of Appeals in accordance with the provisions of §§ **535-56** and **535-57** of the Village Code.

[2] Decisions of the Village Plan Commission in granting, denying, amending, suspending, or revoking a permit under this section may be appealed to the Board of Appeals in accordance with the provisions of §§ **535-56** and **535-57** of the Village Code.

[3] The Board of Appeals shall decide all appeals under this section within 30 days after final hearing and shall transmit a signed copy of the Board's decision to the appellant and to the Planning and Development Department.

(b) Review by court of record. Any person or persons aggrieved by a decision of the Board of Appeals under this section may present to a court of record a verified petition specifying the contents of the decision appealed and the grounds upon which the decision is challenged, appealed or charged to be illegal. Such petition shall be presented to the court within 30 days after the filing of the decision by the Board of Appeals in the office of the Secretary.

(c) Unless otherwise directed, no order, forfeiture, penalty or cost shall accrue or be enforced during the pendancy of an appeal.

D. Conditional use permits for solar and wind energy systems.

(1) Installation and use of a "wind energy system" or a "solar energy system" shall be a conditional use in all districts. The Village Plan Commission may authorize the Planning and Development Department to issue a conditional use permit for solar or wind energy systems after review and a public hearing. Any restriction placed on a solar or wind energy system by the Plan Commission is subject to the limitations found in this section. The review and approval criteria set forth in this subsection shall apply to solar and wind energy systems.

(2) Definitions. As used in this subsection, the following terms shall have the meanings indicated:

A SOLAR ENERGY SYSTEM

Equipment which directly converts and then transfers or stores solar energy into usable forms of thermal or electrical energy.

A WIND ENERGY SYSTEM

Equipment and associated facilities that convert and then store or transfer energy from the wind into usable forms of energy.

(3) Authority to restrict systems limited.

(a) The Village Plan Commission shall review any proposed wind energy system and may approve the system if the applicant meets the owner requirements for a wind energy system as set forth in

§§ PSC 128.10 through 128.19, Wis. Adm. Code, (current through Administrative Register, December 2014, No. 708) and as hereinafter amended, which are hereby incorporated by reference and made a part hereof as if fully set forth herein.

(b) The Village Plan Commission shall review any proposed solar or wind energy system and may only restrict the system if the restriction satisfies one of the following conditions:

[1] Serves to preserve or protect the public health or safety.

[2] Does not significantly increase the cost of the system or significantly decrease its efficiency.

[3] Allows for an alternative system of comparable cost and efficiency.

SHEET INDEX

NO.	SHEET DESCRIPTION
T-1	TITLE SHEET
SP-1	SITE NOTES
SP-2	GENERAL NOTES AND SPECIFICATIONS
A-1	ROOF PLAN
A-1A	EQUIPMENT LAYOUT
A-2	BUILDING ELEVATION
A-2A	ANTENNA CONFIGURATION
A-3	CABLE SCHEDULE AND ANTENNA DETAILS
A-3A	RFDS
A-3B	NSN CONFIGURATION DIAGRAM
A-4	EQUIPMENT DETAILS
A-4A	EQUIPMENT SPECIFICATIONS
A-4B	19" PANEL MOUNTING RACK SPECIFICATIONS
A-4C	23" PANEL MOUNTING RACK SPECIFICATIONS
A-5	CHAIN-LINK FENCE DETAILS
S-1	SSC MOUNTING DETAILS AND STRUCTURAL STEEL NOTES
S-1A	EQUIPMENT LAYOUT
S-2	NEW ANTENNA SLED MOUNT DETAILS
E-1	UTILITY SITE PLAN AND DETAILS
E-1A	NEW UTILITY ROUTING PLAN
E-2	UTILITY RISER DIAGRAM
E-2A	UTILITY DETAILS
E-3	UTILITY DETAILS
E-3A	UTILITY ROUTING DETAILS
EG-1	SITE GROUNDING PLAN
EG-1A	GROUNDING RISER DIAGRAM
EG-2	GROUNDING DETAILS
EG-3	GROUNDING DETAILS
MISC-1	MANDATORY SIGNAGE & POSTING

REGIONAL MAP

VICINITY MAP

DRIVING DIRECTIONS

DRIVING DIRECTIONS FROM T-MOBILE OFFICE AT:
8550 W BRYN MAWR AVE, CHICAGO IL 60631

1. GET ON I-90 W FROM W BRYN MAWR AVE AND N CUMBERLAND AVE 0.9 MI
2. HEAD SOUTH TOWARD W BRYN MAWR AVE 259 FT
3. TURN LEFT ONTO W BRYN MAWR AVE 0.3 MI
4. USE THE LEFT 2 LANES TO TURN LEFT ONTO N CUMBERLAND AVE 0.4 MI
5. USE THE RIGHT LANE TO MERGE ONTO I-90 W VIA THE RAMP TO ROCKFORD/I-294 0.2 MI
6. MERGE ONTO I-90 W 0.6 MI
7. KEEP LEFT TO STAY ON I-90 W 0.9 MI
8. TAKE THE EXIT ONTO I-294 N/TRI-STATE TOLLWAY TOWARD MILWAUKEE 12.7 MI
9. MERGE ONTO I-94 W/TRI-STATE TOLLWAY 19.6 MI
10. KEEP LEFT AT THE FORK TO STAY ON I-94 W, ENTERING WISCONSIN 43.2 MI
11. CONTINUE ONTO I-43 N 0.2 MI
12. KEEP LEFT TO STAY ON I-43 N 2.6 MI
13. TAKE EXIT 74 TOWARD LOCUST ST 0.1 MI
14. MERGE ONTO N 7TH ST 240 FT
15. TURN RIGHT ONTO W LOCUST ST 1.6 MI
16. TURN LEFT ONTO N OAKLAND AVE 0.8 MI
17. TURN LEFT ONTO E RIVER PARK CT 0.1 MI

DESTINATION WILL BE ON THE RIGHT

TOTAL TRAVEL ESTIMATE: 83.5 MILES, ABOUT 1 HOUR AND 20 MINUTES.

(C) Concordia 2001-2016, Copyright Notice: These Documents/Drawings Are Produced by and Are Therefore The Intellectual Property of Concordia Group Of Companies. Do Not Copy, Reproduce, Reverse-Engineer or Replicate Any Parts of These Documents In any Manner Without Obtaining Written Consent From The Concordia Group.

CONTRACTOR SHALL HAVE THE SITE MANNED WITH A SUPERVISOR AND CREW FOR THE FULL DAYS OF THE BUILD.
GC SHALL CONTACT THE A&E FIRM PRIOR TO BIDWALK AND CONSTRUCTION START TO CONFIRM THAT DRAWINGS ARE THE MOST RECENT SET.

Scope of Work

THE SCOPE OF WORK CONSISTS OF INSTALLATION OF NEW WIRELESS EQUIPMENT:

1. INSTALLATION OF (6) NEW ANTENNAS
2. INSTALLATION OF (1) GPS ANTENNA
3. INSTALLATION OF (2) SYSTEM MODULES
4. INSTALLATION OF (6) RF MODULES
5. INSTALLATION OF (4) COVP'S
6. INSTALLATION OF (3) HYBRID CABLES, (1) MICROWAVE CABLE & (1) COAX CABLE FOR GPS
7. INSTALLATION OF (1) 19' PANEL MOUNTING EQUIPMENT RACK W/ MODULES
8. INSTALLATION OF (1) 23' PANEL MOUNTING BATTERY RACK
9. INSTALLATION OF (3) SLED MOUNTS

T··Mobile·

stick together®

NSD PROJECT

Site Number

ML91205A

Site Name

RIVER PARK APARTMENTS (EAST BUILDING)

Site Address

1700 E. RIVER PARK COURT
SHOREWOOD, WI 53211

CALL DIGGER 1-800-242-8511

CALL DIGGERS HOTLINE
FOR UNDERGROUND UTILITIES PRIOR TO DIGGING
1-800-242-8511 OR **811**

APPROVALS

T-MOBILE OPS _____
R.F. OPS _____
R.F. ENGINEER _____
SITE ACQUISITION _____
CONSTRUCTION _____
SITE OWNER _____

PROFESSIONAL LICENSURE

I CERTIFY THAT THESE DRAWINGS WERE PREPARED BY ME OR UNDER MY DIRECT SUPERVISION AND CONTROL AND TO THE BEST OF MY KNOWLEDGE AND BELIEF COMPLY WITH THE REQUIREMENTS OF THE GOVERNING LOCAL BUILDING CODE.

WISCONSIN GHAZWAN M. SADAT 40304 ARLINGTON HEIGHTS, ILLINOIS PROFESSIONAL ENGINEER

LICENSED PROFESSIONAL - STATE OF WISCONSIN

EXPIRES: 07-31-18 SIGNED: 10-07-16

PROJECT INFORMATION

LATITUDE: N 43° 04' 59.50" (NAD 83)
LONGITUDE: W 87° 53' 18.90" (NAD 83)
GROUND ELEVATION: 635.8' (AMSL)
FAA INFORMATION OBTAINED FROM 1A FAA CERTIFICATE PREPARED BY CONCORDIA WIRELESS, INC. DATED: 8/31/16
SITE TYPE: ROOFTOP
JURISDICTION: VILLAGE OF SHOREWOOD
COUNTY: MILWAUKEE
UTILITIES:
POWER: WE ENERGIES, PHONE: (414) 221-2345
FIBER: AT&T, PHONE: (920) 738-9600

APPLICANT: T- MOBILE, 8550 W BRYN MAWR AVE, SUITE 100, CHICAGO IL 60631, PHONE: (773) 444-5400
SITE ACQUISITION: LCC TELECOM, CONTACT: ERIC LAUGESEN, PHONE: (847) 360-2142
ENGINEERING CONTACT: CONCORDIA WIRELESS, INC., CONTACT: GM SADAT, PE, PHONE: (847) 981-0801, FAX: (847) 589-0643

CODES:

1. INTERNATIONAL BUILDING CODE 2012
2. NATIONAL ELECTRIC CODE (NEC)
3. AMERICAN CONCRETE INSTITUTE (ACI) 318, BUILDING CODE REQUIREMENTS FOR STRUCTURAL CONCRETE
4. AMERICAN INSTITUTE OF STEEL CONSTRUCTION (AISC), MANUAL OF STEEL CONSTRUCTION
5. TELECOMMUNICATIONS INDUSTRY ASSOCIATION (TIA) 222-G, STRUCTURAL STANDARDS FOR STEEL TOWER AND ANTENNA SUPPORTING STRUCTURES
6. TIA 607, COMMERCIAL BUILDING GROUNDING AND BONDING REQUIREMENTS FOR TELECOMMUNICATIONS

T··Mobile·

T-MOBILE
8550 WEST BRYN MAWR AVE.
SUITE 100
CHICAGO, IL 60631
MAIN: (773) 444-5400

CONCORDIA, LTD
A PROFESSIONAL DESIGN FIRM
LICENSE # 3323-011- D.B.A.
CONCORDIA WIRELESS, INC.
361 RANDY ROAD
UNIT 101
CAROL STREAM,IL 60188
MAIN: (847) 981-0801

DRAWN BY: MS	CHECKED BY: GMS
CHECKED BY: RH	APPROVED BY: GMS

No.	Revision/Issue	Date	Initial
A	LEASE EXHIBIT	06/14/16	MS
B	90% REVIEW	08/31/16	KC
C	REV B	09/27/16	VG
D	FINAL	10/07/16	HE

ML91205A
RIVER PARK APARTMENTS
1700 E. RIVER PARK COURT
SHOREWOOD, WI 53211

TITLE SHEET

T-1

NEW ANTENNA	GROUT OR PLASTER
EXISTING ANTENNA	(E) BRICK
GROUND ROD	(E) MASONRY
GROUND BUS BAR	CONCRETE
MECHANICAL GRND. CONN.	EARTH
CAD WELD	GRAVEL
GROUND ACCESS WELL	PLYWOOD
ELECTRIC BOX	SAND
TELEPHONE BOX	WOOD CONT.
LIGHT POLE	WOOD BLOCKING
FND. MONUMENT	STEEL
SPOT ELEVATION	CENTERLINE
SET POINT	PROPERTY/LEASE LINE
REVISION	MATCH LINE
GRID REFERENCE	WORK POINT
DETAIL REFERENCE	GROUND CONDUCTOR
ELEVATION REFERENCE	UT — BELOW GRADE TELEPHONE CONDUIT
	UE — BELOW GRADE ELECTRICAL CONDUIT
	A — COAXIAL CABLE
	OE/OT — OVERHEAD ELECTRIC/TELEPHONE CONDUCTORS
	X — CHAIN LINK FENCING

1 PROJECT SYMBOLS
SCALE: NTS

1. REPRESENTATIVES OF THE OWNER MUST BE NOTIFIED AT LEAST TWO FULL DAYS PRIOR TO COMMENCEMENT OF CONSTRUCTION.

2. DO NOT EXCAVATE OR DISTURB BEYOND THE PROPERTY LINES OR LEASE LINES, UNLESS OTHERWISE NOTED.

3. DO NOT SCALE BUILDING DIMENSIONS FROM DRAWINGS.

4. ANY DRAIN AND/OR FIELD TILE ENCOUNTERED DURING CONSTRUCTION SHALL BE RETURNED TO ITS ORIGINAL CONDITION PRIOR TO COMPLETION OF WORK. SIZE, LOCATION AND TYPE OF ANY UNDERGROUND UTILITIES OR IMPROVEMENTS SHALL BE ACCURATELY NOTED AND PLACED ON AS-CONSTRUCTED DRAWINGS AND ISSUED TO ARCHITECT/ENGINEER AT COMPLETION OF PROJECT.

5. ALL EXISTING UTILITIES, FACILITIES, CONDITIONS, AND THEIR DIMENSIONS SHOWN ON PLANS HAVE BEEN PLOTTED FROM AVAILABLE RECORDS. THE ARCHITECT/ENGINEER AND OWNER ASSUME NO RESPONSIBILITY WHATSOEVER AS TO THE SFOFICIENCY OR ACCURACY OF THE INFORMATION SHOWN ON THE PLANS OR THE MANNER OF THEIR REMOVAL OR ADJUSTMENT. CONTRACTOR SHALL BE RESPONSIBLE FOR DETERMINING EXACT LOCATION OF ALL EXISTING UTILITIES AND FACILITIES PRIOR TO START OF CONSTRUCTION. CONTRACTOR SHALL ALSO OBTAIN FROM EACH UTILITY COMPANY DETAILED INFORMATION RELATIVE TO WORKING SCHEDULES AND METHODS OF REMOVING OR ADJUSTING EXISTING UTILITIES.

6. CONTRACTOR SHALL VERIFY ALL EXISTING UTILITIES BOTH HORIZONTALLY AND VERTICALLY PRIOR TO START OF CONSTRUCTION. ANY DISCREPANCIES OR DOUBTS AS TO THE INTERPRETATION OF PLANS SHOULD BE IMMEDIATELY REPORTED TO THE ARCHITECT/ENGINEER FOR RESOLUTION AND INSTRUCTION, AND NO FURTHER WORK SHALL BE PERFORMED UNTIL THE DISCREPANCY IS CHECKED AND CORRECTED BY THE ARCHITECT/ENGINEER. FAILURE TO SECURE SUCH INSTRUCTION MEANS CONTRACTOR WILL HAVE WORKED AT HIS/HER OWN RISK AND EXPENSE. CONTRACTOR SHALL CALL PUBLIC UTILITY LOCATE FOR UTILITY LOCATIONS 72 HOURS PRIOR TO START OF CONSTRUCTION.

7. ALL NEW AND EXISTING UTILITY STRUCTURES ON SITE AND IN AREAS TO BE DISTURBED BY CONSTRUCTION SHALL BE ADJUSTED TO FINISH ELEVATIONS PRIOR TO FINAL INSPECTION OF WORK.

8. THE BUILDING DEPARTMENT ISSUING THE BUILDING PERMIT SHALL BE NOTIFIED AT LEAST TWO WORKING DAYS PRIOR TO THE COMMENCEMENT OF WORK OR AS STIPULATED BY THE CODE ENFORCEMENT OFFICIAL HAVING JURISDICTION.

9. GRADING OF THE SITE WORK AREA IS TO BE SMOOTH AND CONTINUOUS IN SLOPE AND IS TO FEATHER INTO EXISTING GRADES AT THE GRADING LIMITS.

10. ALL EXCAVATIONS FOR THE INSTALLATION OF FOUNDATIONS, UTILITIES, ETC., SHALL BE PROPERLY LAID BACK OR BRACED IN ACCORDANCE WITH CORRECT OCCUPATIONAL SAFETY AND HEALTH ADMINISTRATION (OSHA) REQUIREMENTS.

11. STRUCTURAL FILLS SUPPORTING PAVEMENTS SHALL BE COMPACTED TO 100% OF MAXIMUM STANDARD PROCTOR DRY DENSITY.

12. NEW GRADES NOT IN BUILDING AND DRIVEWAY IMPROVEMENT AREA TO BE ACHIEVED BY FILLING WITH APPROVED CLEAN FILL AND COMPACTED TO 95% OF STANDARD PROCTOR DENSITY.

13. ALL FILL SHALL BE PLACED IN UNIFORM LIFTS. THE LIFTS THICKNESS SHOULD NOT EXCEED THAT WHICH CAN BE PROPERLY COMPACTED THROUGHOUT ITS ENTIRE DEPTH WITH THE EQUIPMENT AVAILABLE.

14. ANY FILLS PLACED ON EXISTING SLOPES THAT ARE STEEPER THAN 10 HORIZONTAL TO 1 VERTICAL SHALL BE PROPERLY BENCHED INTO THE EXISTING SLOPE AS DIRECTED BY A GEOTECHNICAL ENGINEER.

15. THE GRADES WITHIN THE FENCED-IN AREA ARE TO BE ACHIEVED BY COMPACTING CLEAN FILL TO A DENSITY OF 90% OF STANDARD PROCTOR COVERING THE AREA WITH 6 MIL. VISQUENE (1' OVERLAP AT SEAMS) FOR WEED SUPPRESSION, THEN ACHIEVING FINISH GRADE BY ADDING 6" OF 3/4" CRUSHED STONE-NO FINES.

16. CONTRACTOR SHALL CLEAN ENTIRE SITE AFTER CONSTRUCTION SO THAT NO PAPERS, TRASH, WEEDS, BRUSH OR ANY OTHER DEPOSITS WILL REMAIN. ALL MATERIALS COLLECTED DURING CLEANING OPERATIONS SHALL BE DISPOSED OF OFF-SITE.

17. ALL TREES AND SHRUBS WHICH ARE NOT IN DIRECT CONFLICT WITH THE IMPROVEMENTS SHALL BE PROTECTED.

18. GC TO HIRE PUBLIC LOCATE & PRIVATE LOCATE SERVICE IN ORDER TO LOCATE AND PROTECT ANY AND ALL SURFACE UTILITIES. DO NOT SCALE OFF THESE PLANS FOR ANY BELOW GRADE UTILITIES.

19. THESE PLANS MAY NOT CONTAIN OR REVEAL ALL SUBSURFACE UTILITIES; GC IS RESPONSIBLE OF LOCATING AND PROTECTING ALL UTILITIES DURING CONSTRUCTION

2 GENERAL NOTES
SCALE: NTS

ABV.	ABOVE
ADD'L	ADDITIONAL
A.F.F.	ABOVE FINISHED FLOOR
A.F.G.	ABOVE FINISHED GRADE
ALUM.	ALUMINUM
ALT.	ALTERNATE
ANT.	ANTENNA
APPRX.	APPROXIMATE(LY)
ARCH.	ARCHITECT(URAL)
AWG.	AMERICAN WIRE GAUGE
BLDG.	BUILDING
BLK.	BLOCK
BLKG.	BLOCKING
BM.	BEAM
BTCW.	BARE TINNED COPPER WIRE
B.O.F.	BOTTOM OF FOOTING
B/U	BACK-UP CABINET
CAB.	CABINET
CANT.	CANTILEVER(ED)
C.I.P.	CAST IN PLACE
CLG.	CEILING
CLR.	CLEAR
COL.	COLUMN
CONC.	CONCRETE
CONN.	CONNECTION(OR)
CONST.	CONSTRUCTION
CONT.	CONTINUOUS
DBL.	DOUBLE
DEPT.	DEPARTMENT
DIA.	DIAMETER
DIAG.	DIAGONAL
DIM.	DIMENSION
DWG.	DRAWING(S)
DWL.	DOWEL(S)
EA.	EACH
EL.	ELEVATION
ELEC.	ELECTRICAL
ELEV.	ELEVATOR
EMT.	ELECTRICAL METALLIC TUBING
ENG.	ENGINEER
EQ.	EQUAL
EXP.	EXPANSION
EXIST.(E)	EXISTING
EXT.	EXTERIOR
FAB.	FABRICATION(OR)
F.F.	FINISH FLOOR
F.G.	FINISH GRADE
FIN.	FINISH(ED)
FLR.	FLOOR
FDN.	FOUNDATION
F.O.C.	FACE OF CONCRETE
F.O.M.	FACE OF MASONRY
F.O.S.	FACE OF STUD
F.O.W.	FACE OF WALL
F.S.	FINISH SURFACE
FT.(')	FOOT(FEET)
FTG.	FOOTING
G.	GROWTH (CABINET)
GA.	GAUGE
GI.	GALVANIZE(D)
G.F.I.	GROUND FAULT CIRCUIT INTERRUPTER
GPS.	GLOBAL POSITIONING SYSTEM
GND.	GROUND
HGR.	HANGER
HT.	HEIGHT
ICGB.	ISOLATED COPPER GROUND BUS
IN.(")	INCH(ES)
INT.	INTERIOR
LB.(#)	POUND(S)
L.F.	LINEAR FEET (FOOT)
L.	LONG(ITUDINAL)
MAS.	MASONRY
MAX.	MAXIMUM
MDCMC	METRICOM DESIGNATED CONSTRUCTION MANAGEMENT & CONTRACTING
MECH.	MECHANICAL
MFR.	MANFOACTURER
MIN.	MINIMUM
MISC.	MISCELLANEOUS
MTL.	METAL
(N)	NEW
NO.(#)	NUMBER
N.T.S.	NOT TO SCALE
O.C.	ON CENTER
OPNG.	OPENING
PCS	PERSONAL COMMUNICATION SERVICES
PLY.	PLYWOOD
PRC	PRIMARY RADIO CABINET
P.S.F.	POUNDS PER SQUARE FOOT
P.S.I.	POUNDS PER SQUARE INCH
P.T.	PRESSURE TREATED
PWR.	POWER (CABINET)
QTY.	QUANTITY
RAD.(R)	RADIUS
REF.	REFERENCE
REINF.	REINFORCEMENT(ING)
REQ'D.	REQUIRED
RGS.	RIGID GALVANIZED STEEL
SCH.	SCHEDULE
SHT.	SHEET
SIM.	SIMILAR
SPEC.	SPECIFICATION(S)
SQ.	SQUARE
S.S.	STAINLESS STEEL
STD.	STANDARD
STL.	STEEL
STRUC.	STRUCTURAL
TEMP.	TEMPORARY
THK.	THICK(NESS)
T.O.A.	TOP OF ANTENNA
T.O.C.	TOP OF CURB
T.O.F.	TOP OF FOUNDATION
T.O.P.	TOP OF PLATE (PARAPET)
T.O.S.	TOP OF STEEL
T.O.W.	TOP OF WALL
TYP.	TYPICAL
U.G.	UNDER GROUND
U.L.	UNDERWRITERS LABORATORY
U.N.O.	UNLESS NOTED OTHERWISE
V.I.F.	VERIFY IN FIELD
W	WIDE(WIDTH)
W/	WITH
WAP.	WIRED ACCESSED POINT
WCS	WIRELESS COMMUNICATION SERVICE
WT.	WEIGHT
℄	CENTERLINE
ℙ	PLATE

3 PROJECT ABBREVIATIONS
SCALE: NTS

·T· · ·Mobile·

T-MOBILE
8550 WEST BRYN MAWR AVE.
SUITE 100
CHICAGO, IL 60631
MAIN: (773) 444-5400

CONCORDIA, LTD
A PROFESSIONAL DESIGN FIRM
LICENSE # 3323-011- D.B.A.
CONCORDIA WIRELESS, INC.
361 RANDY ROAD
UNIT 101
CAROL STREAM,IL 60188
MAIN: (847) 981-0801

DRAWN BY: MS	CHECKED BY: GMS
CHECKED BY: RH	APPROVED BY: GMS

WISCONSIN
GHAZWAN M. SADAT
40304
ARLINGTON HEIGHTS ILLINOIS
PROFESSIONAL ENGINEER

ML91205A
RIVER PARK APARTMENTS
1700 E. RIVER PARK COURT
SHOREWOOD, WI 53211

SITE NOTES

SP-1

GENERAL NOTES:

1. OWNER FURNISHED MATERIALS, T-MOBILE "THE COMPANY" WILL PROVIDE AND THE CONTRACTOR WILL INSTALL:

   A. BTS EQUIPMENT FRAME (PLATFORM) AND ICEBRIDGE SHELTER (GROUND BUILD/CO-LOCATE ONLY)
   B. AC/TELCO INTERFACE BOX(PPC)
   C. ICE BRIDGE (CABLE TRAY WITH COVER) (GROUND BUILD/CO-LOCATE ONLY. GC TO FURNISH AND INSTALL FOR ROOFTOP INSTALLATION)
   D. TOWERS, MONOPOLE
   E. TOWER LIGHTING
   F. GENERATORS & LIQUID PROPANE TANK
   G. ANTENNA STANDARD BRACKETS, FRAMES, AND PIPES FOR MOUNTING.
   H. ANTENNAS (INSTALLED BY OTHERS)
   I. TRANSMISSION LINE
   J. TRANSMISSION LINE JUMPERS
   K. TRANSMISSION LINE CONNECTORS WITH WEATHERPROOFING KITS
   L. TRANSMISSION LINE GROUND KITS
   M. HANGERS
   N. HOISTING GRIPS
   O. BTS EQUIPMENT

2. CONTRACTOR TO FURNISH AND INSTALL THE FOLLOWING:

   THE CONTRACTOR IS RESPONSIBLE TO PROVIDE ALL OTHER MATERIALS FOR THE COMPLETE INSTALLATION OF THE SITE INCLUDING, BUT NOT LIMITED TO, SUCH MATERIALS AS FENCING, STRUCTURAL STEEL SUPPORTING SUB-FRAME FOR PLATFORM, ROOFING LABOR AND MATERIALS, GROUNDING RINGS, GROUNDING WIRES, COPPER-CLAD OR XIT CHEMICAL GROUND ROD(S), BUSS BARS, TRANSFORMERS AND DISCONNECT SWITCHES WHERE APPLICABLE, TEMPORARY ELECTRICAL POWER, CONDUIT, LANDSCAPING COMPOUND STONE, CRANES, CORE DRILLING, SLEEPERS AND RUBBER MATTING, REBAR, CONCRETE CAISSONS, PADS AND/OR AUGER MOUNTS, MISCELLANEOUS FASTENERS, CABLE TRAYS, NON-STANDARD ANTENNA FRAMES AND ALL OTHER MATERIAL AND LABOR REQUIRED TO COMPLETE THE JOB ACCORDING TO THE DRAWINGS AND SPECIFICATIONS.
   IT IS THE POSITION OF T-MOBILE TO APPLY FOR PERMITTING AND CONTRACTOR RESPONSIBLE FOR PICKUP AND PAYMENT OF REQUIRED PERMITS.

3. T-MOBILE FURNISHED EQUIPMENT SHALL BE PICKED-UP AT THE T-MOBILE WAREHOUSE, NO LATER THAN 48HR AFTER BEING NOTIFIED INSURED, STORED, UNCRATED, PROTECTED AND INSTALLED BY THE

   CONTRACTOR WITH ALL APPURTENCES REQUIRED TO PLACE THE EQUIPMENT IN OPERATION, READY FOR USE. THE CONTRACTOR SHALL BE RESPONSIBLE FOR THE EQUIPMENT AFTER PICKING UP.

4. ALL EQUIPMENT FURNISHED AND WORK PERFORMED UNDER THE CONTRACT DOCUMENTS SHALL BE GUARANTEED AGAINST DEFECTS IN MATERIALS OR WORKMANSHIP FOR A PERIOD OF ONE (1) YEAR FROM THE DATE OF FINAL ACCEPTANCE, UNLESS NOTED OTHERWISE. ANY FAILURE OF EQUIPMENT OR WORK DUE TO DEFECTS IN MATERIALS OR WORKMANSHIP SHALL BE CORRECTED BY THE CONTRACTOR AT NO COST TO THE OWNER.

5. ALL WORK, MATERIAL, AND EQUIPMENT SHALL COMPLY WITH ALL REQUIREMENTS OF THE LATEST EDITIONS AND INTERIM AMENDMENTS OF THE NATIONAL ELECTRICAL CODE (NEC). NATIONAL ELECTRICAL SAFETY CODE, OSHA, AND ALL APPLICABLE FEDERAL, STATE, AND LOCAL LAWS AND ORDINANCES. ALL ELECTRICAL EQUIPMENT PROVIDED UNDER THIS CONTRACT SHALL BE NEW (EXCEPT WHERE OTHERWISE NOTED) AND SHALL COMPLY WITH THE REQUIREMENTS OF THE UNDERWRITERS' LABORATORIES (U.L.) AND BEAR THE U.L. LABEL.

6. T-MOBILE OR HIS ARCHITECT/ENGINEER RESERVES THE RIGHT TO REJECT ANY EQUIPMENT OR MATERIALS WHICH, IN HIS OPINION ARE NOT IN COMPLIANCE WITH THE CONTRACT DOCUMENTS, EITHER BEFORE OR AFTER INSTALLATION AND THE EQUIPMENT SHALL BE REPLACED WITH EQUIPMENT CONFORMING TO THE REQUIREMENTS OF THE CONTRACT DOCUMENTS BY THE CONTRACTOR AT NO COST TO THE OWNER OR HIS ARCHITECT/ENGINEER.

7. THE CONTRACTOR SHALL SUPPORT, BRACE AND SECURE EXISTING STRUCTURE AS REQUIRED. CONTRACTOR IS SOLELY RESPONSIBLE FOR THE PROTECTION OF ANY EXISTING STRUCTURES DURING CONSTRUCTION. FIELD VERIFY ALL EXISTING DIMENSIONS WHICH AFFECT THE NEW CONSTRUCTION.

8. THE CONTRACTOR SHALL NOT ALLOW OR CAUSE ANY OF THE WORK TO BE COVERED UP OR ENCLOSED UNTIL IT HAS BEEN INSPECTED BY THE GOVERNING AUTHORITIES. ANY WORK THAT IS ENCLOSED OR COVERED UP BEFORE SUCH INSPECTION AND TEST SHALL BE UNCOVERED AT THE CONTRACTOR'S EXPENSE. AFTER IT HAS BEEN INSPECTED, THE CONTRACTOR SHALL RESTORE THE WORK TO ITS ORIGINAL CONDITION AT HIS OWN EXPENSE.

9. ALL EXISTING UTILITIES, FACILITIES, CONDITIONS, AND THEIR DIMENSIONS SHOWN ON PLANS HAVE BEEN PLOTTED FROM AVAILABLE RECORDS. THE ARCHITECT/ENGINEER AND OWNER (T-MOBILE) ASSUME NO RESPONSIBILITY WHATEVER AS TO THE SFOFICIENCY OR ACCURACY OF THE INFORMATION SHOWN ON THE PLANS OR THE MANNER OF THEIR REMOVAL OR ADJUSTMENT. CONTRACTOR SHALL BE RESPONSIBLE FOR DETERMINING EXACT LOCATION OF ALL SAID UTILITIES AND FACILITIES PRIOR TO START OF CONSTRUCTION. CONTRACTOR SHALL ALSO OBTAIN FROM EACH UTILITY COMPANY DETAILED INFORMATION RELATIVE TO WORKING SCHEDULES AND METHODS OF REMOVING OR ADJUSTING AFFECTED UTILITIES.

GENERAL NOTES (CONT'D):

10. CONTRACTOR SHALL FIELD VERIFY ALL EXISTING UTILITIES BOTH HORIZONTALLY AND VERTICALLY PRIOR TO START OF CONSTRUCTION. ANY DISCREPANCIES OR DOUBTS AS TO THE INTERPRETATION OF PLANS SHOULD BE IMMEDIATELY REPORTED TO THE PROJECT MANAGER FOR RESOLUTION AND INSTRUCTION, AND NO FURTHER WORK SHALL BE PERFORMED UNTIL DISCREPANCY IS CHECKED AND CORRECTED BY THE ARCHITECT/ENGINEER. FAILURE TO SECURE SUCH INSTRUCTION MEANS CONTRACTOR WILL HAVE WORKED AT HIS OWN RISK AND EXPENSE.

11. CONTRACTORS SHALL CLEAN ENTIRE SITE EACH DAY AFTER CONSTRUCTION SUCH THAT NO PAPERS, TRASH, DEBRIS, WEEDS, BRUSH, OR ANY OTHER DEPOSITS REMAIN. ALL MATERIALS COLLECTED DURING CLEANING OPERATIONS SHALL BE PROPERLY DISPOSED OF OFF-SITE BY THE CONTRACTOR.

12. ALL SITE WORK SHALL BE CAREFULLY COORDINATED BY THE CONTRACTOR WITH LOCAL GAS, ELECTRIC, TELEPHONE, AND ANY OTHER UTILITY COMPANIES HAVING JURISDICTION OVER THIS LOCATION.

13. DURING CONSTRUCTION, THE CONTRACTOR SHALL AT ALL TIMES MAINTAIN THE UTILITIES OF THE BUILDING/SITE WITHOUT INTERRUPTION. SHOULD IT BE NECESSARY TO INTERRUPT ANY SERVICE OR UTILITY, THE CONTRACTOR SHALL SECURE PERMISSION IN WRITING FROM THE BUILDING/PROPERTY OWNER FOR SUCH INTERRUPTION. AT LEAST 72 HOURS IN ADVANCE. ANY INTERRUPTION SHALL BE MADE WITH A MINIMUM AMOUNT OF INCONVENIENCE TO THE BUILDING/PROPERTY OWNER AND ANY SUCH SHUTDOWN TIME SHALL BE COORDINATED WITH THE BUILDING/PROPERTY OWNER.

14. CONTRACTOR SHALL MINIMIZE DISTURBANCE TO EXISTING SITE DURING CONSTRUCTION. EROSION CONTROL MEASURES, IF REQUIRED DURING CONSTRUCTION.

15. CONTRACTOR SHALL SUBMIT AT THE END OF THE PROJECT A COMPLETE SET OF AS BUILT DRAWINGS TO T-MOBILE'S PROJECT ENGINEER.

16. GC WILL NOT START THE CONSTRUCTION UNTIL AFTER THEY RECEIVE THE PRE CON PACKAGE AND HAVE A PRE CON WALK WITH THE PROJECT MANAGER.

DIVISION 2 - SITE WORK:

1. THE CONTRACTOR SHALL CALL UTILITIES PRIOR TO THE START OF CONSTRUCTION.

   ALL EXISTING ACTIVE SEWER, WATER, GAS, ELECTRIC, AND OTHER UTILITIES WHERE ENCOUNTERED IN THE WORK SHALL BE PROTECTED AT ALL TIMES, AND WHERE REQUIRED FOR THE PROPER EXECUTION OF THE WORK, SHALL BE RELOCATED AS DIRECTED BY THE PROJECT MANAGER. EXTREME CAUTION SHOULD BE USED BY THE CONTRACTOR WHEN EXCAVATING OR PIER DRILLING AROUND OR NEAR UTILITIES. CONTRACTOR SHALL PROVIDE SAFETY TRAINING FOR THE WORKING CREW. THIS WILL INCLUDE BUT NOT LIMITED TO:

   A. FALL PROTECTION
   B. CONFINED SPACE
   C. ELECTRICAL SAFETY
   D. TRENCHING AND EXCAVATION

2. REMOVE FROM SITE/OWNER'S PROPERTY ALL WASTE MATERIALS, UNUSED EXCAVATED MATERIAL INCLUDING MATERIAL CLASSIFIED UNSATISFACTORY, CONTAMINATED OR DANGEROUS TRASH AND DEBRIS, AND DISPOSE OF IN A LEGAL MANNER.

3. ALL EXISTING INACTIVE SEWER, WATER, GAS, ELECTRIC AND OTHER UTILITIES, WHICH INTERFERE WITH THE EXECUTION OF THE WORK, SHALL BE REMOVED AND/OR CAPPED, PLUGGED OR OTHERWISE DISCONTINUED AT POINTS WHICH WILL NOT INTERFERE WITH THE EXECUTION OF THE WORK, SUBJECT TO THE APPROVAL OF ENGINEERING.

4. THE AREAS OF THE OWNERS PROPERTY DISTURBED BY THE WORK AND NOT COVERED BY THE BUILDING OR DRIVEWAY, SHALL BE GRADED TO A UNIFORM SLOPE, FERTILIZED, SEEDED, AND COVERED WITH MULCH

5. CONTRACTOR SHALL MINIMIZE DISTURBANCE TO EXISTING SITE DURING CONSTRUCTION. EROSION CONTROL MEASURES, AS REQUIRED DURING CONSTRUCTION.

   CONTRACTOR IS RESPONSIBLE FOR LAYOUT AND CONSTRUCTION STAKING. CONTRACTOR SHALL ESTABLISH GRADE AND LINE STAKES PRIOR TO CONSTRUCTION.

   CONCORDIA DOES NOT GUARANTEE OR WARRANT THAT THE AFOREMENTIONED EASEMENTS ARE SFOFICIENT FOR CONSTRUCTION TRAFFIC. GC SHALL CONSULT WITH A T-MOBILE REPRESENTATIVE AND LANDLORD WITH EXACT LOGISTICS TO FACILITATE CONTRACTIBILITY OF THE SITE AND DELIVERY OF CRITICAL MATERIALS SUCH AS THE TOWER, STEEL, CONCRETE AND CRANES TO THE PROPOSED LEASE AREA. GC SHALL RESTORE SITE TO ORIGINAL CONDITIONS AND REPLACE ANY AND ALL DISTURBED TREES OR LANDSCAPING.

   CONCORDIA IS NOT RESPONSIBLE FOR THE MAINTENANCE AND/OR OPERATIONAL FEASIBILITY.

   SCOPE OF WORK FOR THESE PLANS DOES NOT INVOLVE VALUE ENGINEERING AS WELL AS MAINTAINABILITY OPERATIONS OF THE SITE, ACCESS OR UTILITIES.

DIVISION 3 - CONCRETE:

1. MINIMUM ALLOWABLE CONCRETE COMPRESSIVE STRENGTH SHALL BE 4000 PSI AT 28 DAYS WHEN TESTED IN ACCORDANCE WITH THE AMERICAN SOCIETY FOR TESTING AND MATERIALS METHODS STANDARDS ASTM C172, ASTM C31 AND ASTM C39 UNLESS OTHERWISE NOTED.

2. CONCRETE FOR ALL FOUNDATIONS: 540 LBS PER CUBIC YARD OF CONCRETE MINIMUM CEMENT CONTENT FOR 1-INCH MAXIMUM SIZE AGGREGATE, SLUMP RANGE 3 INCHES TO 5 INCHES, TOTAL AIR CONTENT 4 PERCENT TO 7 PERCENT BY VOLUME. AIR ENTRAINING ADMIXTURE REQUIRED TO CONTROL TOTAL AIR CONTENT, WATER REDUCING ADMIXTURE PERMITTED TO OBTAIN SLUMP OVER 3-INCHES.

3. ALL CONCRETE CONSTRUCTION SHALL MEET THE REQUIREMENTS OF THE LATEST EDITION OF THE AMERICAN CONCRETE INSTITUTE (ACI 318) BUILDING CODE REQUIREMENTS FOR REINFORCED CONCRETE AND (ACI 301) STANDARD SPECIFICATION FOR STRUCTURAL CONCRETE.

4. REBARS SHALL BE ASTM A-615 DEFORMED TYPE WITH MINIMUM YIELD STRENGTH OF 60,000 PSI (40,000 PSI GRADE MAY BE USED FOR TIES & STIRRUPS).

   WELDED WIRE FABRIC SHALL CONFORM TO ASTM A-185.

5. DETAILING SHALL BE IN ACCORDANCE WITH MANUAL OF STANDARD PRACTICE OF DETAILING REINFORCED CONCRETE STRUCTURES (ACI STD-315 LATEST EDITION).

6. CHAMFER ALL EXPOSED EDGES OF CONCRETE 3/4" UNLESS OTHERWISE NOTED.

7. REINFORCING STEEL SHALL BE ACCURATELY PLACED AND ADEQUATELY SECURED IN POSITION. LOCATION OF REINFORCEMENT SHALL BE INDICATED ON THE DRAWINGS. THE FOLLOWING MINIMUM COVER (INCHES) FOR REINFORCEMENT SHALL BE PROVIDED, EXCEPT AS NOTED ON DRAWINGS.

   MINIMUM COVER (INCHES)
   CAST AGAINST AND PERMANENTLY EXPOSED TO EARTH ... 3"
   EXPOSED TO EARTH OR WEATHER:
   #6 THROUGH #18 ... 2"
   #5 BAR AND SMALLER ... 1-1/2"

8. TESTS
   CONCRETE MATERIALS AND OPERATIONS SHALL BE TESTED AND INSPECTED BY THE ENGINEER AS THE WORK PROGRESSES. FAILURE TO DETECT ANY DEFECTIVE WORK OR MATERIAL SHALL NOT IN ANY WAY PREVENT LATER REJECTION WHEN SUCH DEFECT IS DISCOVERED NOR SHALL IT OBLIGATE THE ENGINEER FOR FINAL ACCEPTANCE.

   A. FIVE CONCRETE TEST CYLINDERS SHALL BE TAKEN OF THE TOWER PIER FOUNDATION. TWO SHALL BE TESTED @ THREE DAYS, TWO @ TWENTY-EIGHT DAYS. THE FIFTH CYLINDER SHALL BE KEPT SEPARATELY, IF REQUIRED TO BE USED IN THE FUTURE.

   B. ONE ADDITIONAL TEST CYLINDER SHALL BE TAKEN DURING COLD WEATHER AND CURED ON SITE UNDER SAME CONDITIONS AS CONCRETE IT REPRESENTS.

   C. ONE SLUMP TEST SHALL BE TAKEN FOR EACH SET OF TEST CYLINDERS TAKEN.

9. PLACING CONCRETE
   A. THE ENGINEER SHALL BE NOTIFIED NOT LESS THAT 24 HOURS IN ADVANCE OF CONCRETE PLACEMENT, UNLESS INSPECTION IS WAIVED IN EACH CASE. PLACING OF CONCRETE SHALL BE PERFORMED ONLY IN THE PRESENCE OF THE ENGINEER. CONCRETE SHALL NOT BE PLACED UNTIL ALL FORMWORK, EMBEDDED PARTS, STEEL REINFORCEMENT, FOUNDATION SURFACES AND JOINTS INVOLVED IN THE PLACING HAVE BEEN APPROVED, AND UNTIL FACILITIES ACCEPTABLE TO THE T-MOBILE REPRESENTATIVE HAVE BEEN PROVIDED AND MADE READY FOR ACCOMPLISHMENT OF THE WORK AS SPECIFIED. CONCRETE MAY NOT BE ORDERED FOR PLACEMENT UNTIL ALL ITEMS HAVE BEEN APPROVED AND T-MOBILE HAS PERFORMED A FINAL INSPECTION AND GIVEN APPROVAL TO START PLACEMENT IN WRITING.

   B. PLACEMENT OF CONCRETE SHALL BE IN ACCORDANCE WITH ACI 301.

10. PROTECTION
    A. IMMEDIATELY AFTER PLACEMENT, THE CONTRACTOR SHALL PROTECT THE CONCRETE FROM PREMATURE DRYING, EXCESSIVELY HOT OR COLD TEMPERATURES, AND MECHANICAL INJURY. FINISHED WORK SHALL BE PROTECTED.

    B. CONCRETE SHALL BE MAINTAINED WITH MINIMAL MOISTURE LOSS AT RELATIVELY CONSTANT TEMPERATURE FOR A PERIOD NECESSARY FOR HYDRATION OF CEMENT AND HARDENING OF CONCRETE.

    C. ALL CONCRETE SHALL BE WATER CURED BY CONTINUOUS (NOT PERIODIC) FINE MIST SPRAYING OR SPRINKLING ALL EXPOSED SURFACES. WATER SHALL BE CLEAN AND FREE FROM ACID, ALKALI, SALTS, OIL SEDIMENT, AND ORGANIC MATTER. SUCCESSFUL CURING SHALL BE OBTAINED BY USE OF AN AMPLE WATER SUPPLY UNDER PRESSURE IN PIPES, WITH ALL NECESSARY APPLIANCES OF SPRINKLERS, AND SPRAYING DEVICES.

ELECTRICAL NOTES:

1. ELECTRICAL DESIGN SHALL BE PERFORMED BY ELECTRICAL CONTRACTOR. STRUCTRUAL DESIGN SHALL BE PERFORMED BY GENERAL CONTRACTOR. ELECTRICAL CONTRACTOR SHALL ENSURE THAT ALL WORK COMPLIES WITH ALL APPLICABLE LOCAL AND STATE CODES AND NATIONAL ELECTRICAL CODE.

2. ALL SUGGESTED ELECTRICAL ELEMENTS (SUCH AS BREAKER SIZES, WIRE SIZES, CONDUITS SIZES ARE FOR ZONING PURPOSES ONLY. IT IS THE RESPONSIBILITY TO OF THE ELECTRICAL CONTRACTOR TO CONFIRM COMPLIANCE WITH LOCAL ELECTRICAL CODES AND PASS ALL APPLICABLE AND NECESSARY INSPECTIONS. IN SOME EVENTS, IT MAY BE NECESSARY TO PERFORM AN ELECTRICAL LOAD STUDY TO VERIFY THE CAPACITY OF THE EXISTING SERVICE. THIS IS NOT THE RESPONSIBILITY OF CONCORDIA. IT IS THE RESPONSIBILITY OF THE ELECTRICAL CONTRACTOR.

3. CONTRACTOR SHALL FIELD LOCATE ALL BELOW GRADE GROUND LINES AND UTILITY LINES PRIOR TO CONSTRUCTION. CONTRACTOR IS RESPONSIBLE FOR RELOCATION OF ALL UTILITIES AND GROUND LINES THAT MAY BECOME DISTURBED OR CONFLICTING IN THE COURSE OF CONSTRUCTION.

DIVISION 5 - STRUCTURAL STEEL:

1. DETAIL, FABRICATE AND ERECT STRUCTURAL STEEL IN ACCORDANCE WITH THE LATEST AISC MANUAL OF STEEL CONSTRUCTION (ASD), AWS D1.1, AND THE BASIC BUILDING CODE. STRUCTURAL STEEL SHALL BE AS FOLLOWS:

   A. ASTM A36, GRADE 36; ROLLED STEEL, RODS, PLATES, U-BOLTS AND ANCHOR BOLTS.
   B. ASTM A325 BOLTS, BEARING TYPE
   C. ALL STEEL SHALL BE HOT-DIP GALVANIZED IN ACCORDANCE WITH ASTM A123.

2. THE CONTRACTOR SHALL PROVIDE ADEQUATE SHORING AND/OR BRACING WHERE REQUIRED DURING CONSTRUCTION UNTIL ALL CONNECTIONS ARE COMPLETE

3. ANY FIELD CHANGES OR SUBSTITUTIONS SHALL HAVE PRIOR APPROVAL FROM THE ENGINEER, AND T- MOBILE PROJECT MANAGER IN WRITING

4. TIGHTEN HIGH STRENGTH BOLTS TO A SNUG TIGHT CONDITION WHERE ALL PLIES IN A JOINT ARE IN FIRM CONTACT BY EITHER

   A. A FEW IMPACTS OF A IMPACT WRENCH
   B. THE FULL EFFORT OF A PERSON USING A SPUD WRENCH.

5. WELDING
   A. ALL WELDING SHALL BE DONE BY CERTIFIED WELDERS. CERTIFICATION DOCUMENTS SHALL BE MADE AVAILABLE FOR ENGINEER'S AND/OR OWNER'S REVIEW IF REQUESTED.

   B. WELDING ELECTRODES FOR MANUAL SHIELDED METAL ARC WELDING SHALL CONFORM TO ASTM A-233, E70 SERIES. BARE ELECTRODES AND GRANULAR FLUX USED IN THE SUBMERGED ARC PROCESS SHALL CONFORM TO AISC SPECIFICATIONS.

   C. FIELD WELDING SHALL BE DONE AS PER AWSD1.1 REQUIREMENTS VISUAL INSPECTION IS ACCEPTABLE.

6. PROTECTION
   A. UPON COMPLETION OF ERECTION INSPECT ALL GALVANIZED STEEL AND PAINT ANY FIELD CUTS, WELDS, OR GALVANIZED BREAKS WITH ZINC BASED PAINT. COLOR TO MATCH THE GALVANIZING PROCESS.

DIVISION 13 - SPECIAL CONSTRUCTION ANTENNA INSTALLATION

1. WORK INCLUDED:
   A. ANTENNAS AND COAXIAL CABLES ARE FURNISHED BY T-MOBILE UNDER A SEPARATE CONTRACT. THE CONTRACTOR SHALL ASSIST ANTENNA INSTALLATION CONTRACTOR IN TERMS OF COORDINATION AND SITE ACCESS. ERECTION SUB-CONTRACTOR SHALL BE RESPONSIBLE FOR THE PROTECTION OF PERSONNEL AND

   B. INSTALL ANTENNAS AS INDICATED ON DRAWINGS AND T-MOBILE SPECIFICATIONS.

   C. INSTALL GALVANIZED STEEL ANTENNA MOUNTS AS INDICATED ON DRAWINGS.

   D. INSTALL FURNISHED GALVANIZED STEEL OR ALUMINUM WAVEGUIDE AND PROVIDE PRINTOUT OF THAT TEST. PROPERTY.

   E. CONTRACTOR SHALL PROVIDE FOUR (4) SETS OF SWEEP TESTS USING ANRITZU-PACKARD 8713B RF SCALAR NETWORK ANALYZER. SUBMIT FREQUENCY DOMAIN REFLECTOMETER(FDR) TESTS RESULTS TO THE PROJECT MANAGER. SWEEP TESTS SHALL BE AS PER ATTACHED RFS "MINIMUM FIELD TESTING RECOMMENDED FOR ANTENNA AND HELIAX COAXIAL CABLE SYSTEMS" DATED 10/5/93. TESTING SHALL BE PERFORMED BY AN INDEPENDENT TESTING SERVICE AND BE BOUND AND SUBMITTED WITHIN ONE WEEK OF WORK COMPLETION.

   F. INSTALL COAXIAL CABLES AND TERMINATING BETWEEN ANTENNAS AND EQUIPMENT PER MANFOACTURER'S RECOMMENDATIONS. WEATHERPROOF ALL CONNECTORS BETWEEN THE ANTENNA AND EQUIPMENT PER MANFOACTURER'S REQUIREMENTS. TERMINATE ALL COAXIAL CABLE THREE (3) FEET IN EXCESS OF ENTRY PORT LOCATION UNLESS OTHERWISE STATED.

   G. ANTENNA AND COAXIAL CABLE GROUNDING:
      1. ALL EXTERIOR #6 GREEN GROUND WIRE "DAISY CHAIN" CONNECTIONS ARE TO BE WEATHER SEALED WITH RFS CONNECTOR/SPLICE WEATHERPROOFING KIT #221213 OR EQUAL.
      2. ALL COAXIAL CABLE GROUNDING KITS ARE TO BE INSTALLED ON STRAIGHT RUNS OF COAXIAL CABLE (NOT WITHIN BENDS).

ROOF PROTECTION NOTES:

1. THE CONTRACTOR SHALL NOTIFY THE OWNER'S REPRESENTATIVE A MINIMUM OF SEVEN (7) DAYS PRIOR TO THE BEGINNING OF WORK THAT INVOLVES ACTIVITY ON THE ROOF
2. THE CONTRACTOR AND THE OWNER'S REPRESENTATIVE SHALL INSPECT THE EXPOSED ROOFING MEMBRANE SYSTEM PRIOR TO THE START OF CONSTRUCTION. ANY PREVIOUS DAMAGE OR DEFECTS OF THE ROOFING SYSTEM SHALL BE DOCUMENTED BY WRITING AND/OR PHOTOGRAPHS.
3. THE CONTRACTOR SHALL PLACE MINIMUM OF 48" WIDE, 1/2" THICK APPROVED PROTECTION BOARDS (1 LAYER) MADE OF CONSTRUCTION GRADE PLYWOOD (ORIENTED STRAND BOARD WILL BE ACCEPTABLE) OVER ALL MEMBRANE ROOFING THAT WILL HAVE CONSTRUCTION TRAFFIC. THIS ROOF PROTECTION SHALL BE PROVIDED FOR THE ENTIRE AREA WITHIN LIMITS OF THE WORK. SUCH PROTECTION SHALL ALSO BE PROVIDED IN THE FORM OF A WALKWAY FROM THE ROOF ACCESS DOOR TO THE PROTECTED CONSTRUCTION AREA.
4. STORAGE OF MATERIALS ON EXISTING ROOF WILL NOT BE ALLOWED.
5. THE CONTRACTOR SHALL REMOVE DAILY ALL PROJECT DEBRIS FROM ALL ROOFING SURFACES.
6. THE CONTRACTOR SHALL ADVISE THE OWNER'S REPRESENTATIVE WHEN WORK ON THE ROOF IS COMPLETE AND THE PROTECTION BOARDS HAVE BEEN REMOVED. THE CONTRACTOR AND THE OWNER'S REPRESENTATIVE SHALL EXAMINE ALL ROOF SURFACES WHERE WORK HAS OCCURRED AND WILL REPAIR ALL DEFECTS NOT PREVIOUSLY DOCUMENTED.
7. CONTRACTOR SHALL BE RESPONSIBLE FOR ANY DAMAGE TO THE BUILDING, ROOF, STRUCTURAL FRAMING, ETC. INCURRED DURING CONSTRUCTION.
8. CONTRACTOR SHALL UTILIZE A LICENSED APPLICATOR OF THE EXISTING ROOFING SYSTEM TO REPAIR ANY AND ALL DAMAGE INCURRED THE COURSE OF CONSTRUCTION.
9. THE CONTRACTOR TO VERIFY WARRANTY ON THE EXISTING MEMBRANE ROOFING SYSTEM. THE CONTRACTOR SHALL UTILIZE A LICENSED APPLICATOR OF THE EXISTING ROOFING SYSTEM TO PERFORM ALL ROOFING WORK AND TO THE REPAIR ANY AND ALL DAMAGE. UPON COMPLETION, THE CONTRACTOR SHALL OBTAIN A LETTER FROM THE ROOFING MFR. STATING THAT ANY EXISTING WARRANTY REMAINS IN FULL FORCE AND EFFECT.

T-MOBILE
8550 WEST BRYN MAWR AVE.
SUITE 100
CHICAGO, IL 60631
MAIN: (773) 444-5400

CONCORDIA, LTD
A PROFESSIONAL DESIGN FIRM
LICENSE # 3323-011- D.B.A.
CONCORDIA WIRELESS, INC.
361 RANDY ROAD
UNIT 101
CAROL STREAM,IL 60188
MAIN: (847) 981-0601

DRAWN BY: MS	CHECKED BY: GMS
CHECKED BY: RH	APPROVED BY: GMS

WISCONSIN
GHAZWAN M. SADAT
40304
ARLINGTON HEIGHTS ILLINOIS
PROFESSIONAL ENGINEER

ML91205A
RIVER PARK APARTMENTS
1700 E. RIVER PARK COURT
SHOREWOOD, WI 53211

GENERAL NOTES & SPECIFICATIONS

SP-2

LEGEND & SYMBOLS

- UTILITY POLE
- SIGN
- TELCO PEDESTAL
- FIRE HYDRANT
- LIGHT STANDARD
- INLET
- CATCH BASIN
- MANHOLE
- TRAFFIC SIGNAL
- ROW MARKER
- IRON PIPE SET
- IRON PIPE FOUND
- BUFFALO BOX
- VALVE BOX
- HORIZONTAL CONTROL POINT
- HANDICAPPED PARKING SPACE
- DT10 — DECIDUOUS TREE W/SIZE
- CT10 — CONIFEROUS TREE W/SIZE
- BRUSH
- TREE LINE
- 666 — CONTOUR W/ELEVATION
- EXISTING GUARDRAIL
- CHAIN LINK FENCE
- IRON FENCE
- WOOD FENCE
- OE/OT — OVERHEAD WIRES
- LOT LINE
- PROPERTY LINE
- LEASE AREA LINE
- UTILITY EASEMENT LINE
- CENTER LINE
- UE — UNDERGROUND ELECTRIC LINE
- UG — UNDERGROUND GAS LINE
- FO — UNDERGROUND FIBER LINE
- UT — UNDERGROUND TELCO LINE
- SS/SA — UNDERGROUND STORM/SANITARY SEWER LINE
- W — UNDERGROUND WATER LINE
- COM — UNDERGROUND COMMUNICATION/MONITORING LINE
- CONCRETE
- ASPHALT
- GRAVEL
- CULTIVATED FIELD
- GRASS AREA
- ICE BRIDGE
- STEEL PLATFORM

NEW HYBRID CABLE LENGTH		ACTUAL LENGTH	FACTORY LENGTH
FROM MAIN COVP LOCATED INSIDE NEW T-MOBILE EQUIPMENT LEASE AREA TO **ALPHA SECTOR** COVP	1	±168'	175'
FROM MAIN COVP LOCATED INSIDE NEW T-MOBILE EQUIPMENT LEASE AREA TO **BETA SECTOR** COVP	2	±92'	100'
FROM MAIN COVP LOCATED INSIDE NEW T-MOBILE EQUIPMENT LEASE AREA TO **GAMMA SECTOR** COVP	3	± 143'	150'

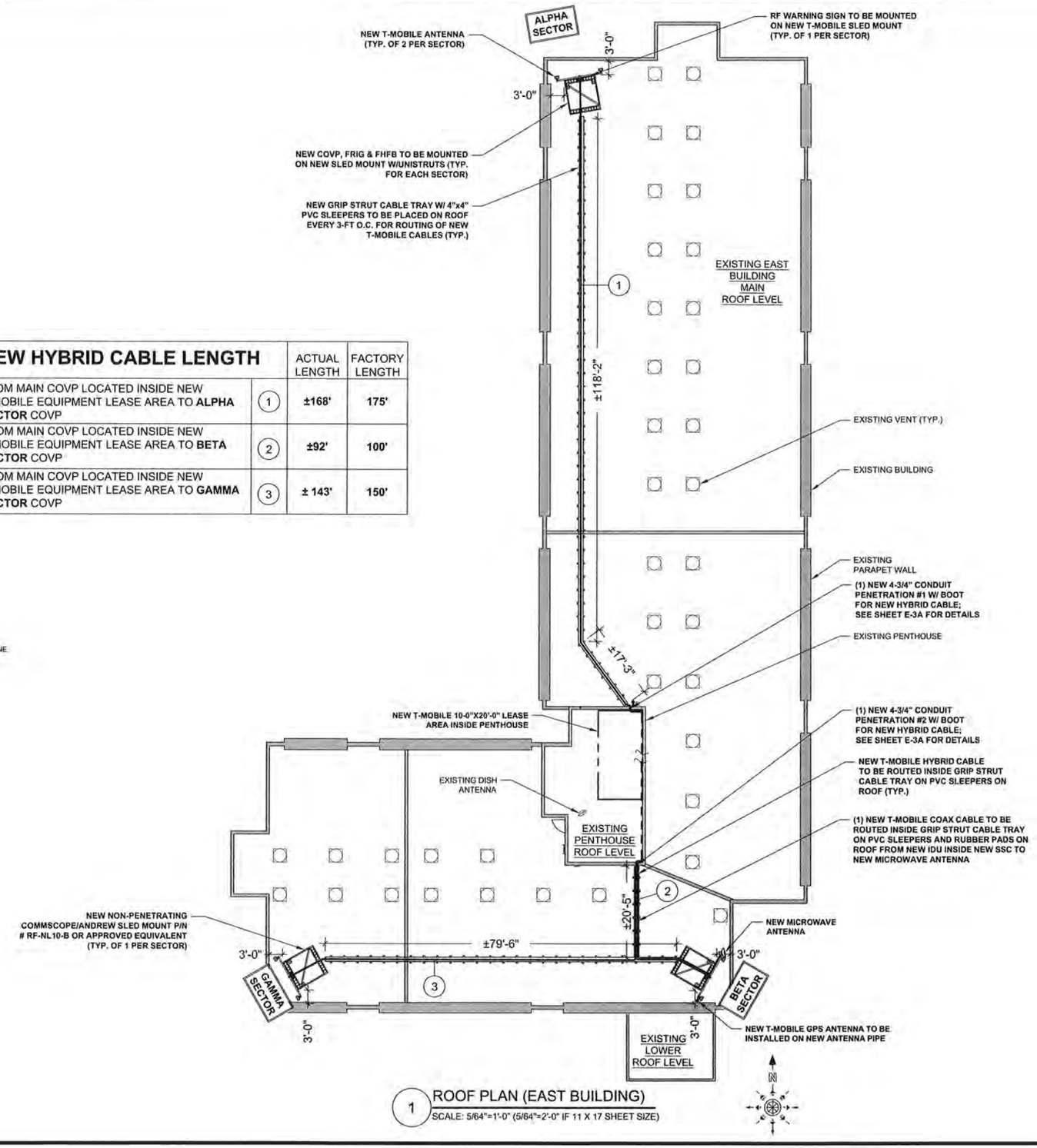

1 ROOF PLAN (EAST BUILDING)
SCALE: 5/64"=1'-0" (5/64"=2'-0" IF 11 X 17 SHEET SIZE)

T-Mobile

T-MOBILE
8550 WEST BRYN MAWR AVE.
SUITE 100
CHICAGO, IL 60631
MAIN: (773) 444-5400

CONCORDIA, LTD
A PROFESSIONAL DESIGN FIRM
LICENSE # 3323-011- D.B.A.
CONCORDIA WIRELESS, INC.
361 RANDY ROAD
UNIT 101
CAROL STREAM,IL 60188
MAIN: (847) 981-0801

DRAWN BY: MS	CHECKED BY: GMS
CHECKED BY: RH	APPROVED BY: GMS

WISCONSIN
GHAZWAN M. SADAT
40304
ARLINGTON HEIGHTS ILLINOIS
PROFESSIONAL ENGINEER

ML91205A
RIVER PARK APARTMENTS
1700 E. RIVER PARK COURT
SHOREWOOD, WI 53211

ROOF PLAN

A-1

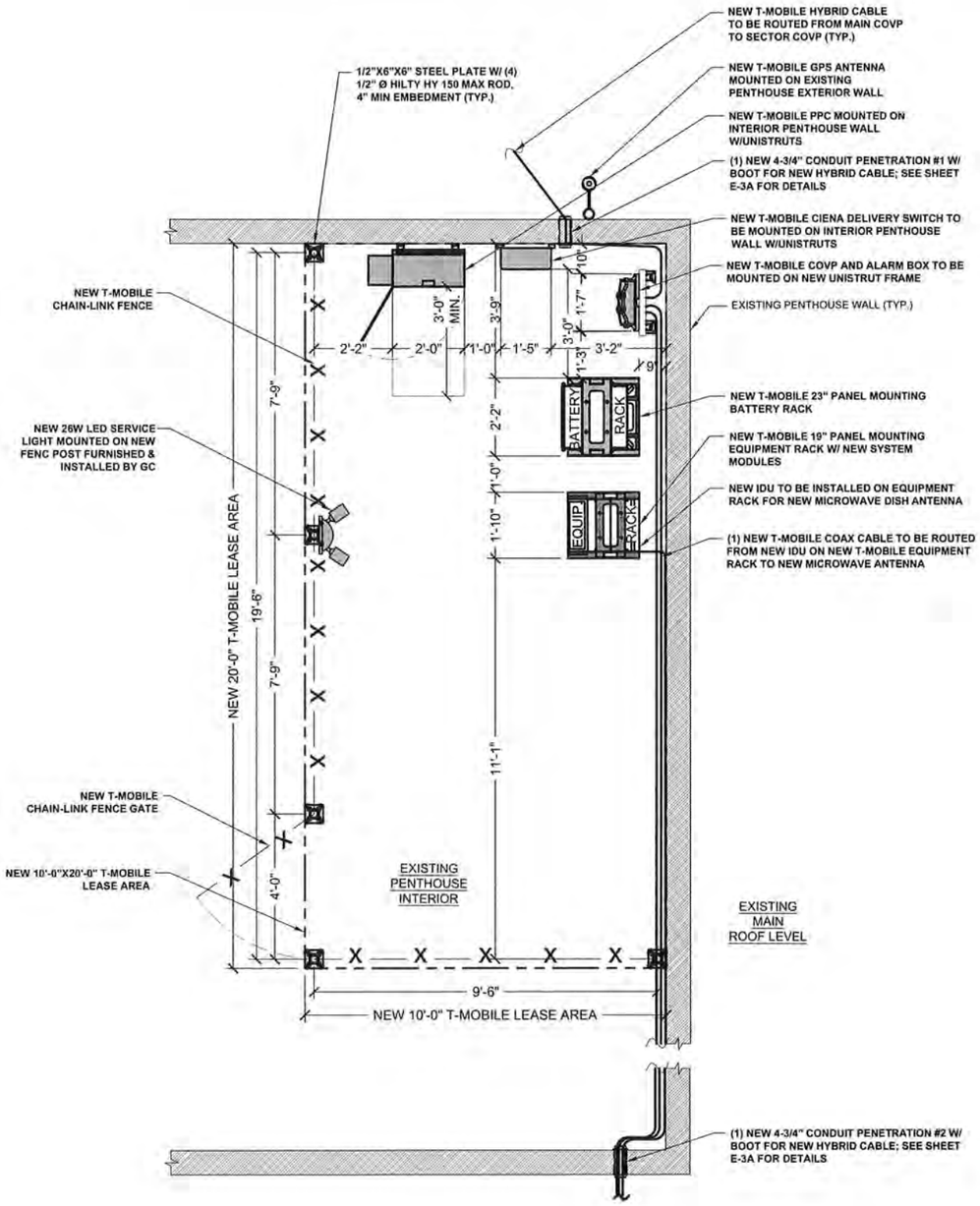

1 EQUIPMENT LAYOUT
SCALE: 1/2=1'-0" (1/2"=2'-0" IF 11 X 17 SHEET SIZE)

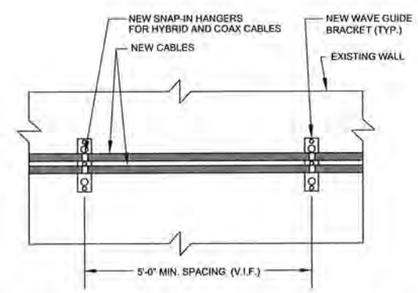

2 TYPICAL CABLE ROUTING DETAIL ON EXISTING WALL
SCALE: N.T.S.

T-Mobile

T-MOBILE
8550 WEST BRYN MAWR AVE.
SUITE 100
CHICAGO, IL 60631
MAIN: (773) 444-5400

CONCORDIA, LTD
A PROFESSIONAL DESIGN FIRM
LICENSE # 3323-011- D.B.A.
CONCORDIA WIRELESS, INC.
361 RANDY ROAD
UNIT 101
CAROL STREAM,IL 60188
MAIN: (847) 981-0801

DRAWN BY: MS	CHECKED BY: GMS
CHECKED BY: RH	APPROVED BY: GMS

WISCONSIN
GHAZWAN M. SADAT
40304
ARLINGTON HEIGHTS ILLINOIS
PROFESSIONAL ENGINEER

ML91205A
RIVER PARK APARTMENTS
1700 E. RIVER PARK COURT
SHOREWOOD, WI 53211

EQUIPMENT LAYOUT

A-1A

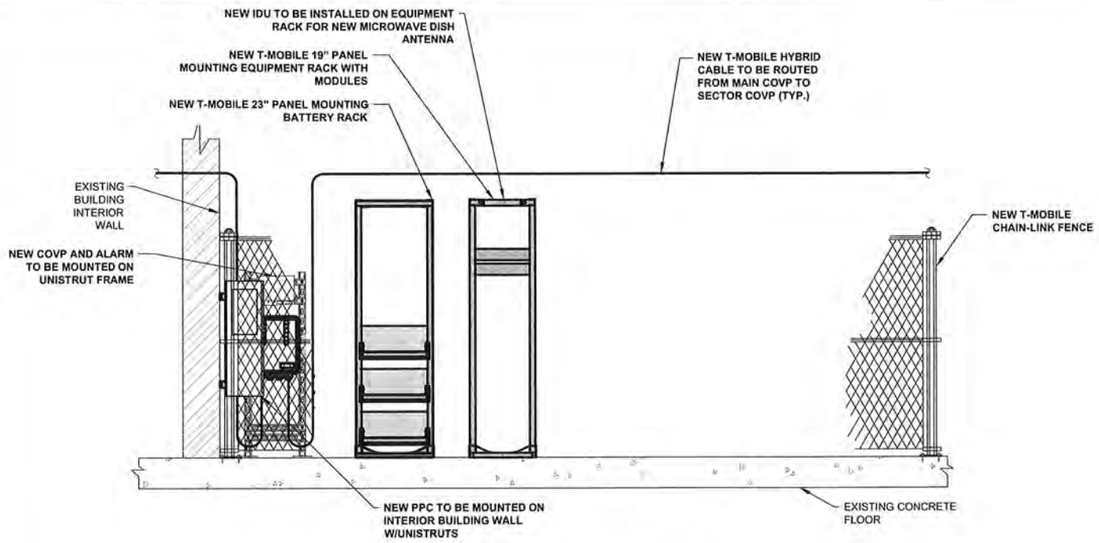

1 EQUIPMENT ELEVATION
SCALE: 1/2=1'-0" (1/2"=2'-0" IF 11 X 17 SHEET SIZE)

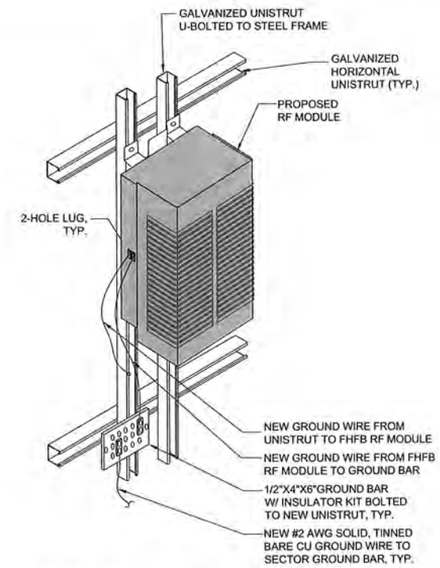

2 TYPICAL RF UNIT MOUNTING DETAIL
SCALE: N.T.S.

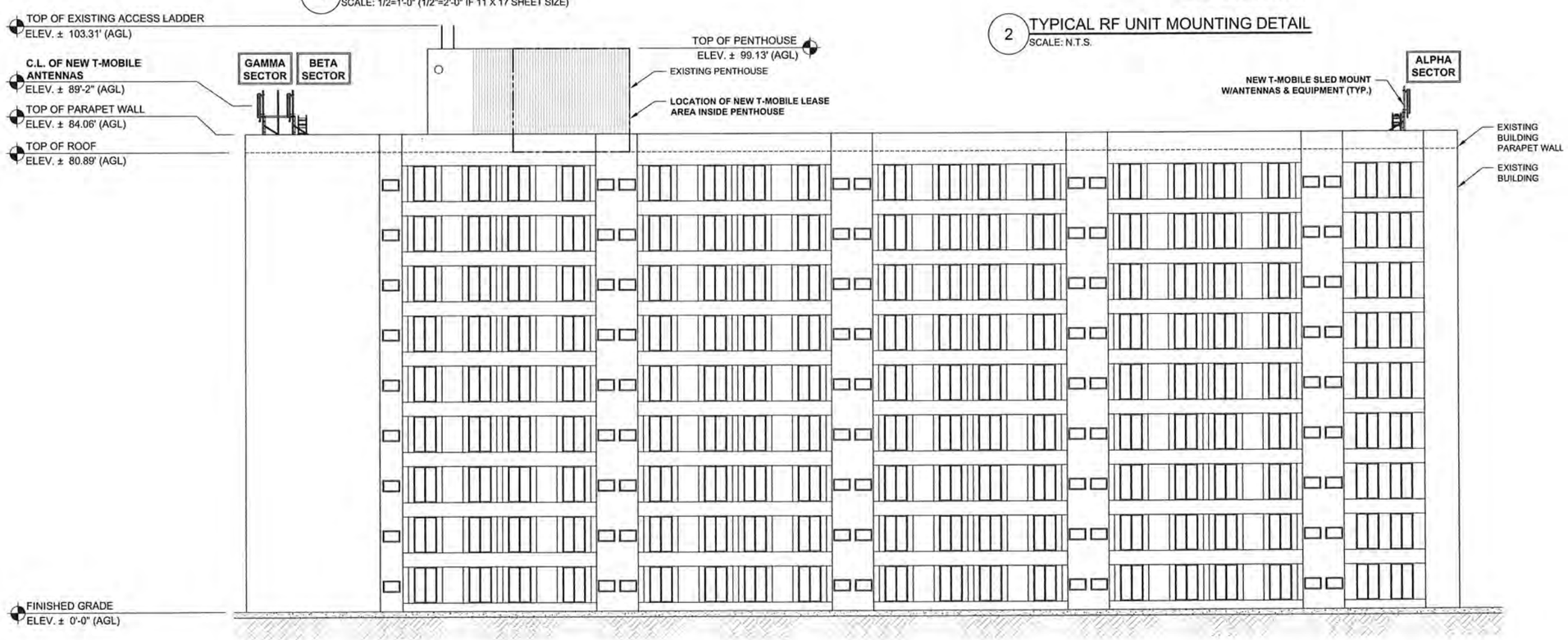

3 EAST BUILDING ELEVATION (EAST BUILDING)
SCALE: 1/8"=1'-0" (1/8"=2'-0" IF 11 X 17 SHEET SIZE)

T-Mobile

T-MOBILE
8550 WEST BRYN MAWR AVE.
SUITE 100
CHICAGO, IL 60631
MAIN: (773) 444-5400

CONCORDIA, LTD
A PROFESSIONAL DESIGN FIRM
LICENSE # 3323-011- D.B.A.
CONCORDIA WIRELESS, INC.
361 RANDY ROAD
UNIT 101
CAROL STREAM,IL 60188
MAIN: (847) 981-0801

DRAWN BY: MS	CHECKED BY: GMS
CHECKED BY: RH	APPROVED BY: GMS

WISCONSIN
GHAZWAN M. SADAT
40304
ARLINGTON HEIGHTS ILLINOIS
PROFESSIONAL ENGINEER

ML91205A
RIVER PARK APARTMENTS
1700 E. RIVER PARK COURT
SHOREWOOD, WI 53211

BUILDING ELEVATION

A-2

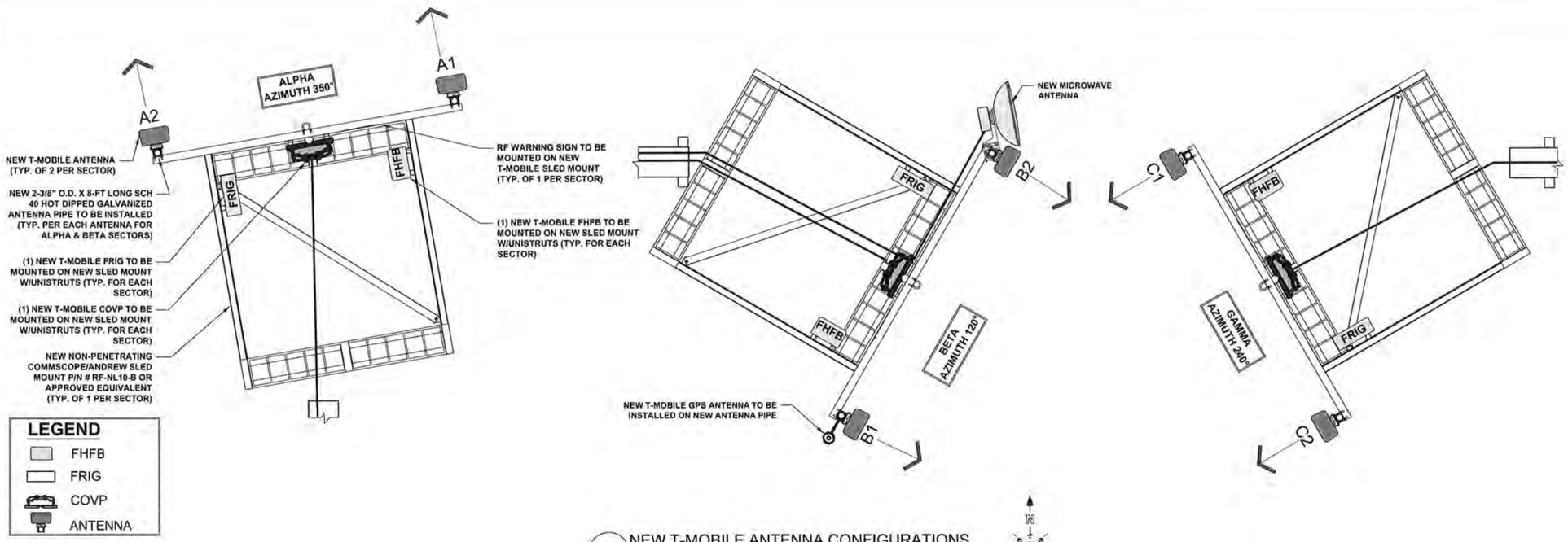

1 NEW T-MOBILE ANTENNA CONFIGURATIONS
SCALE: 1/2"=1'-0" (1/2"=2'-0" IF 11 X 17 SHEET SIZE)

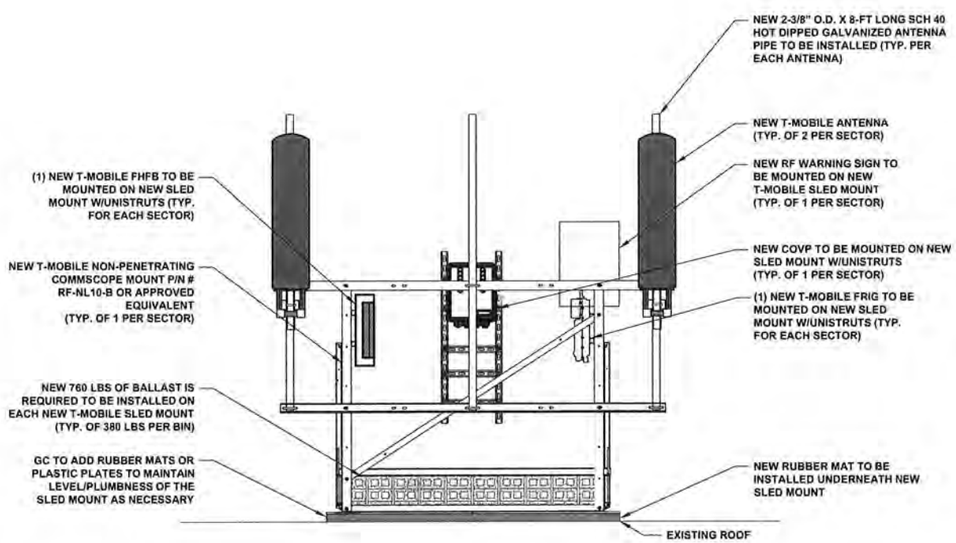

2 NEW SLED MOUNT FRONT VIEW
SCALE: 1/2"=1'-0" (1/2"=2'-0" IF 11 X 17 SHEET SIZE)

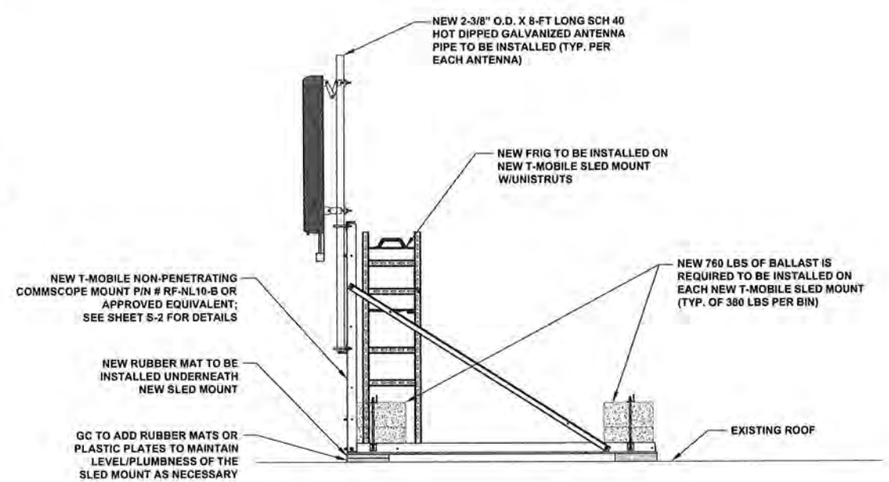

3 NEW SLED MOUNT SIDE VIEW
SCALE: 1/2"=1'-0" (1/2"=2'-0" IF 11 X 17 SHEET SIZE)

T-Mobile

T-MOBILE
8550 WEST BRYN MAWR AVE.
SUITE 100
CHICAGO, IL 60631
MAIN: (773) 444-5400

CONCORDIA, LTD
A PROFESSIONAL DESIGN FIRM
LICENSE #3323-011- D.B.A.
CONCORDIA WIRELESS, INC.
361 RANDY ROAD
UNIT 101
CAROL STREAM,IL 60188
MAIN: (847) 981-0801

DRAWN BY: MS	CHECKED BY: GMS
CHECKED BY: RH	APPROVED BY: GMS

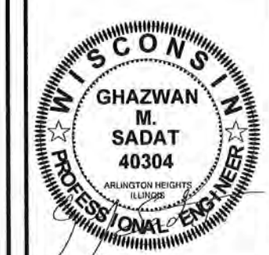

ML91205A
RIVER PARK APARTMENTS
1700 E. RIVER PARK COURT
SHOREWOOD, WI 53211

ANTENNA CONFIGURATION

A-2A

ANTENNA AND CABLE SCHEDULE

SECTOR	ALPHA				BETA				GAMMA			
LOCATION	A-2	-	-	A-1	B-2	-	-	B-1	C-2	-	-	C-1
TECHNOLOGY	LTE-AWS	-	-	LTE/UMTS-PCS	LTE-AWS	-	-	LTE/UMTS-PCS	LTE-AWS	-	-	LTE/UMTS-PCS
AZIMUTH	350°				120°				240°			
RAD CENTER	±89'-2"				±89'-2"				±89'-2"			
COLOR CODING	RED (5-8)	-	-	RED (1-4)	GREEN (5-8)	-	-	GREEN (1-4)	BLUE (5-8)	-	-	BLUE (1-4)
MODEL #	ANDREW TMBXX-6516-A2M	-	-	ANDREW TMBXX-6516-A2M	ANDREW TMBXX-6516-A2M	-	-	ANDREW TMBXX-6516-A2M	ANDREW TMBXX-6516-A2M	-	-	ANDREW TMBXX-6516-A2M
MECHANICAL DOWNTILT	4	-	-	4	4	-	-	4	4	-	-	4
ELECTRICAL DOWNTILT	4	-	-	4	4	-	-	4	4	-	-	4
RRU TYPE	FRIG	-	-	FHFB	FRIG	-	-	FHFB	FRIG	-	-	FHFB
HCS DIA. & TYPE	1.584" HIGH CAPACITY	-	-	-	1.24" LOW CAPACITY	-	-	-	1.24" LOW CAPACITY	-	-	-
HCS ACTUAL LENGTH	**±168'**	-	-	-	**±92'**	-	-	-	**±143'**	-	-	-
HCS FACTORY LENGTH	**175'**	-	-	-	**100'**	-	-	-	**150'**	-	-	-
BUNDLE DIA. & TYPE	-	-	-	-	-	-	-	-	-	-	-	-
BUNDLE FACTORY LENGTH	-	-	-	-	-	-	-	-	-	-	-	-
JUMPER TYPE FROM COVP TO RRU	HYBRID JUMPER	-	-	HYBRID JUMPER	HYBRID JUMPER	-	-	HYBRID JUMPER	HYBRID JUMPER	-	-	HYBRID JUMPER
JUMPER LENGTH	9'	-	-	9'	9'	-	-	9'	9'	-	-	9'
JUMPER TYPE FROM RRU TO ANTENNA	RF JUMPER	-	-	RF JUMPER	RF JUMPER	-	-	RF JUMPER	RF JUMPER	-	-	RF JUMPER
JUMPER LENGTH	12'	-	-	12'	12'	-	-	12'	12'	-	-	12'

1. GC TO INSTALL (1) NEW COAX CABLE FOR MICROWAVE DISH ANTENNA. APPROXIMATE LENGTH: ±100'

1. ALL ANTENNAS SHALL BE FURNISHED WITH DOWNTILT BRACKETS. CONTRACTOR SHALL COORDINATE REQUIRED MECHANICAL DOWNTILT FOR EACH ANTENNA WITH RF ENGINEER. ANTENNA DOWNTILT SHALL BE SET AND VERIFIED BY A SMART LEVEL.
2. ANTENNA CENTERLINE HEIGHT IS IN REFERENCE TO ELEVATION 0'-0"
3. CONTRACTOR SHALL INSTALL COLOR CODE RINGS ON EACH OF THE HYBRID CABLES AND JUMPER CABLES WITH UV RESISTANT TAPE. ALL CABLE SHALL BE MARKED AT TOP AND BOTTOM WITH 2" COLOR TAPE OR STENCIL TAG. COLOR TAPE MAY BE OBTAINED FROM GRAYBAR ELECTRONICS.

NOTES :

1. GC TO VERIFY FINAL RF CONFIGURATION w/T-MOBILE RF ENGINEER PRIOR TO INSTALLATION.

2. GC TO VERIFY W/ T-MOBILE RF ENGINEER WHICH PORTS SHALL REMAIN UNUSED; GC TO INSTALL A CAP ON ALL UNUSED PORTS

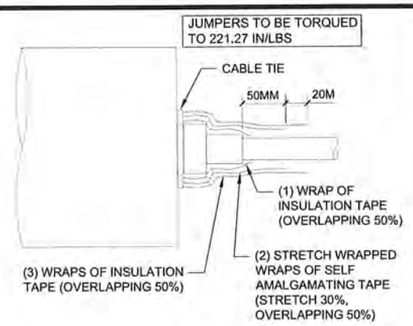

1 RF JUMPER CONNECTION DETAIL
SCALE: N.T.S.

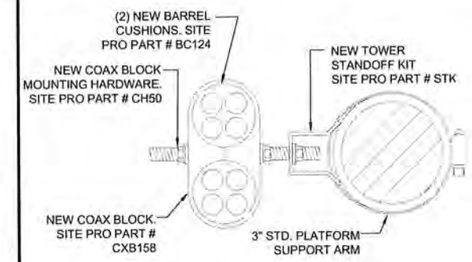

2 RF JUMPER MOUNTING DETAIL
SCALE: N.T.S.

Coax Color Coding

- Antennas will be labeled (back of antenna view) Right to left 1 - X ports
- Coax/Jumper lines will be identified by sector color and by number of bands around the coax/jumper

SECTOR A	RED
SECTOR B	GREEN
SECTOR C	BLUE
SECTOR D	YELLOW
SECTOR E	WHITE
SECTOR F	PURPLE
LMU	BROWN
FIBER ID	GRAY
UNUSED COAX	PINK
MICROWAVE	ORANGE
DWE T-1'S + GPS DOWNLINK CABLE	ID W/LABEL MAKER

FRONT OF THE ANTENNA

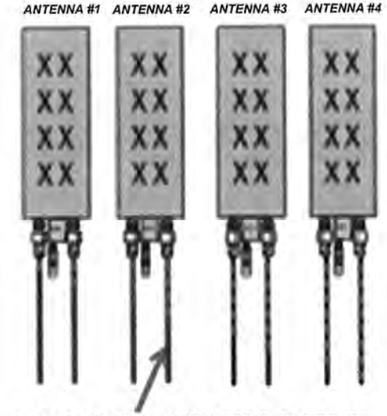

EXAMPLE: COAX WITH FOUR BANDS OF RED TAPE WILL REPRESENT ALPHA SECTOR AND THE 4TH PORT OF ANTENNA

1. ALL ANTENNAS SHALL BE FURNISHED WITH DOWNTILT BRACKETS. CONTRACTOR SHALL COORDINATE REQUIRED MECHANICAL DOWNTILT FOR EACH ANTENNA WITH RF ENGINEER. ANTENNA DOWNTILT SHALL BE SET AND VERIFIED BY A SMART LEVEL.
2. CONTRACTOR SHALL INSTALL COLOR CODE RINGS ON EACH OF THE COAX CABLES AND JUMPER CABLES WITH UV RESISTANT TAPE. ALL CABLE SHALL BE MARKED AT TOP AND BOTTOM WITH 2" COLOR TAPE OR STENCIL TAG. COLOR TAPE MAY BE OBTAINED FROM GRAYBAR ELECTRONICS.

COLOR CODING NOTES:

color	GSM
color	UMTS 1900
color	UMTS AWS
color	LTE
color	FIBER CABLE

METALLIC TAG NOTES:

1. TWO METALLIC TAGS SHALL BE ATTACHED AT EACH END OF EVERY CABLE LONGER THAN (3) THREE FEET
2. CABLE LESS THAN (3) THREE FEET WILL HAVE TWO METALLIC TAGS ATTACHED AT THE CENTER OF THE CABLE.
3. TAGS WILL BE FASTENED WITH STAINLESS STEEL ZIP TIES APPROPRIATE FOR CABLE DIAMETER.
4. STANDARDIZED METALLIC TAG KIT WILL BE ASSEMBLED WITH TAGS ALREADY ENGRAVED TO ACCOMMODATE ALL CONFIGURATIONS.

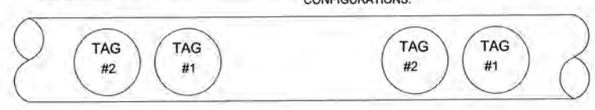

3 TAGGING COLOR AND NOTES
SCALE: N.T.S.

T-Mobile

T-MOBILE
8550 WEST BRYN MAWR AVE.
SUITE 100
CHICAGO, IL 60631
MAIN: (773) 444-5400

CONCORDIA, LTD
A PROFESSIONAL DESIGN FIRM
LICENSE # 3323-011- D.B.A.
CONCORDIA WIRELESS, INC.
361 RANDY ROAD
UNIT 101
CAROL STREAM,IL 60188
MAIN: (847) 981-0801

DRAWN BY: MS	CHECKED BY: GMS
CHECKED BY: RH	APPROVED BY: GMS

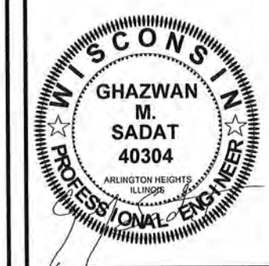

ML91205A
RIVER PARK APARTMENTS
1700 E. RIVER PARK COURT
SHOREWOOD, WI 53211

CABLE SCHEDULE & ANTENNA DETAILS

A-3

Site ID: ML91205A	Site Name: River Park Apartments	Latitude: 43.08354700
Status: Final	Site Class: Roof Top Mount	Longitude: -87.88967400
Version: 0.1	Site Type: Building	Address: 1700 E. River Park Court
Project Type: Capacity-L1900	Solution Type:	City, State: Shorewood, WI
Approved: 10/5/2016 11:15:25 AM	Plan Year:	Region: CENTRAL
Approved By: GSM1900\RRohani1	Market: MILWAUKEE	
Last Modified: 10/5/2016 11:15:25 AM	Vendor: Nokia	
Last Modified By: GSM1900\RRohani1	Landlord: Ogden and Company, Inc.	

RAN Template: 92G		AL Template: 92G		
Sector Count: 3	Antenna Count: 6	Coax Line Count: 0	TMA Count: 0	RRU Count: 6

Sector 1 (Proposed) view from front (Note: the images show view from behind)

Coverage Type	A - Outdoor Macro			
Antenna	1		2	
Antenna Model	TMBXX-6516-A2M (Quad)		TMBXX-6516-A2M (Quad)	
Azimuth	350		350	
M. Tilt	4		4	
Height	89		89	
Ports	P1	P2	P3	P4
Active Tech.	U1900 L1900	U1900 L1900	L2100	L2100
Dark Tech.				
Restricted Tech.				
Decomm. Tech.				
E. Tilt	4	4	4	4
Cables				
TMAs				
Diplexers / Combiners				
Radio				
Sector Equipment				

Sector 2 (Proposed) view from front (Note: the images show view from behind)

Coverage Type	A - Outdoor Macro			
Antenna	1		2	
Antenna Model	TMBXX-6516-A2M (Quad)		TMBXX-6516-A2M (Quad)	
Azimuth	120		120	
M. Tilt	4		4	
Height	89		110	
Ports	P1	P2	P3	P4
Active Tech.	U1900 L1900	U1900 L1900	L2100	L2100
Dark Tech.				
Restricted Tech.				
Decomm. Tech.				
E. Tilt	4	4	4	4
Cables				
TMAs				
Diplexers / Combiners				
Radio				
Sector Equipment				

Sector 3 (Proposed) view from front (Note: the images show view from behind)

Coverage Type	A - Outdoor Macro			
Antenna	1		2	
Antenna Model	TMBXX-6516-A2M (Quad)		TMBXX-6516-A2M (Quad)	
Azimuth	240		240	
M. Tilt	4		4	
Height	110		110	
Ports	P1	P2	P3	P4
Active Tech.	U1900 L1900	U1900 L1900	L2100	L2100
Dark Tech.				
Restricted Tech.				
Decomm. Tech.				
E. Tilt	4	4	4	4
Cables				
TMAs				
Diplexers / Combiners				
Radio				
Sector Equipment				

Proposed RAN Equipment

Template: 92G

Enclosure	1	2	3	4
Enclosure Type	Ancillary Equipment	Generic Cabinet	Generic Site Support Cabinet	Tower Top Mount
Baseband		FSMF L2100 L1900; FSMF U1900		
Baseband Submodule		FBBC L2100; FBBC L1900; FBBA U1900		
Hybrid Cable System	NSN High Cap HCS 175ft NSN Low Cap HCS 150ft NSN Low Cap HCS 100ft			
Junction Box	Large COVP			Large COVP (x3)
Power subsystem			Batteries *Select size* Breakers *Select size* CSR 7705 *Select model* Rectifier Shelf *Select size*	
Radio				FHFB (x3) U1900 L1900; FRIG (x3) L2100

RAN Scope of Work:

9/9/2016
Updating RAD center to 89.2 feet from 110 ft (Building height is 80.89' not as it mentioned in SCIP 110')

1 RFDS

T-Mobile

T-MOBILE
8550 WEST BRYN MAWR AVE.
SUITE 100
CHICAGO, IL 60631
MAIN: (773) 444-5400

CONCORDIA, LTD
A PROFESSIONAL DESIGN FIRM
LICENSE # 3323-011- D.B.A.
CONCORDIA WIRELESS, INC.
361 RANDY ROAD
UNIT 101
CAROL STREAM,IL 60188
MAIN: (847) 981-0801

DRAWN BY: MS	CHECKED BY: GMS
CHECKED BY: RH	APPROVED BY: GMS

WISCONSIN
GHAZWAN M. SADAT
40304
ARLINGTON HEIGHTS ILLINOIS
PROFESSIONAL ENGINEER

ML91205A
RIVER PARK APARTMENTS
1700 E. RIVER PARK COURT
SHOREWOOD, WI 53211

RFDS

A-3A

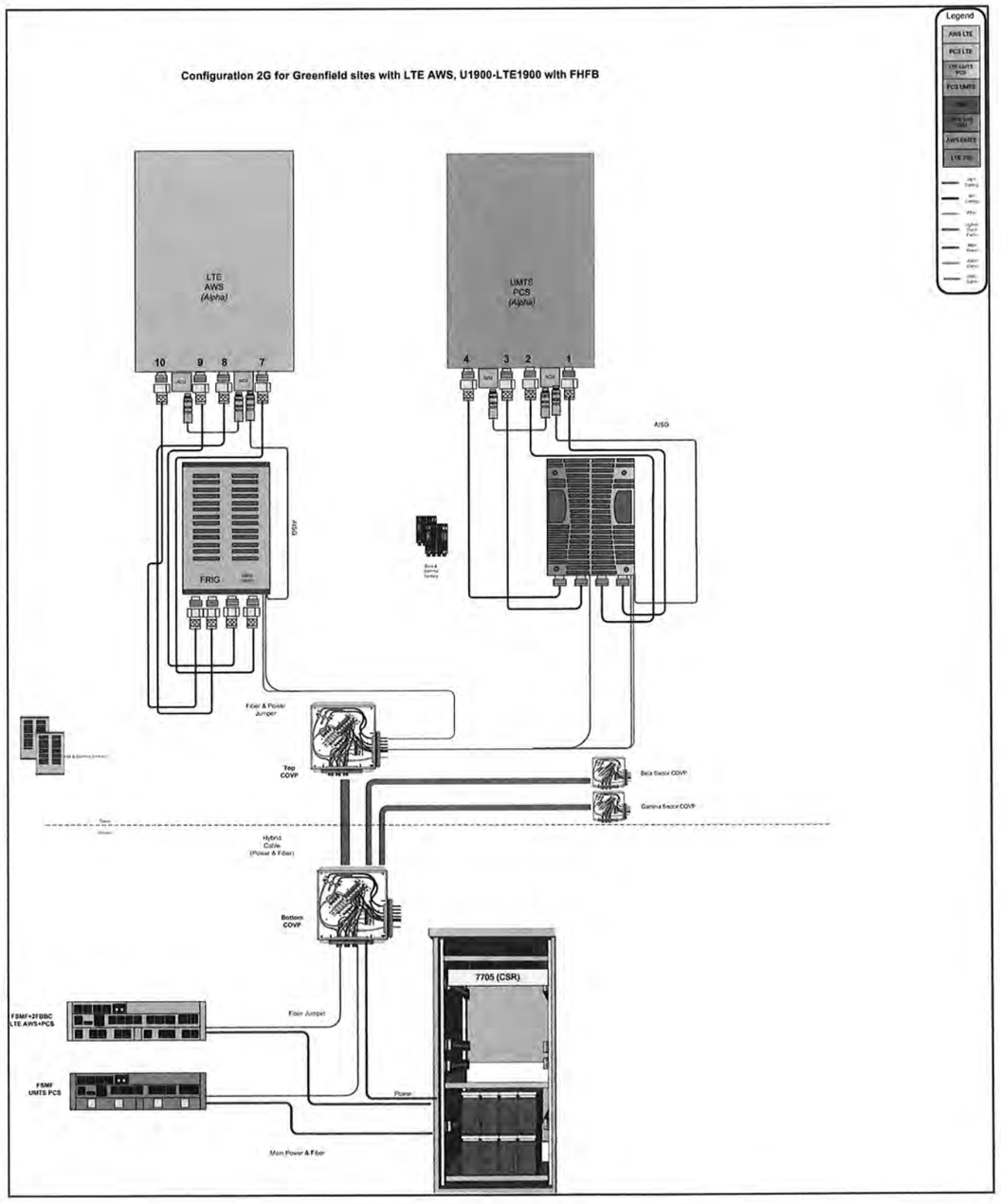

1 NSN CONFIGURATION DIAGRAM

T-Mobile

T-MOBILE
8550 WEST BRYN MAWR AVE.
SUITE 100
CHICAGO, IL 60631
MAIN: (773) 444-5400

CONCORDIA, LTD
A PROFESSIONAL DESIGN FIRM
LICENSE # 3323-011- D.B.A.

CONCORDIA WIRELESS, INC.

361 RANDY ROAD
UNIT 101
CAROL STREAM,IL 60188
MAIN: (847) 981-0801

DRAWN BY: MS	CHECKED BY: GMS
CHECKED BY: RH	APPROVED BY: GMS

WISCONSIN
GHAZWAN M. SADAT
40304
ARLINGTON HEIGHTS, ILLINOIS
PROFESSIONAL ENGINEER

ML91205A
RIVER PARK APARTMENTS
1700 E. RIVER PARK COURT
SHOREWOOD, WI 53211

NSN CONFIGURATION DIAGRAM

A-3B

NOTES:

1. THE GPS ANTENNA MOUNT IS DESIGNED TO FASTEN TO A STANDARD 1-1/4" DIA. SCH. 40 GALVANIZED OR STAINLESS STEEL PIPE. THE PIPE MUST BE THREADED AT THE ANTENNA MOUNT END. THE PIPE SHALL BE CUT TO THE REQUIRED LENGTH (MIN. OF 18') USING A WAND OR ROTARY PIPE CUTTER TO ASSURE A SMOOTH PERPENDICULAR CUT. THE CUT PIPE END SHALL BE DEBURRED AND SMOOTH IN ORDER TO SEAL AGAINST THE NEOPRENE GASKET ATTACHED TO THE ANTENNAS MOUNT.

2. THE MOUNTING PLATE SHALL BE FABRICATED AS SHOWN AND ATTACHED TO THE APPROPRIATE SUPPORT STRUCTURE USING U-BOLTS. THE SUPPORT PIPE FOR THE GPS SHALL BE MOUNTED USING OVERSIZED U-BOLTS TO ALLOW ADJUSTMENT. IT IS CRITICAL THAT THE GPS ANTENNA IS MOUNTED WITHIN 2° OF VERTICAL AND THE BASE OF THE ANTENNA IS WITHIN 2° LEVEL.

3. INSTALL GPS ANTENNA AS SPECIFIED ON SITE PLAN. IF INSTALLING ON ICE/CABLE BRIDGE ENSURE THAT GPS IS A MINIMUM OS 10' ABOVE GRADE, ON THE FURTHEST POST FROM THE TOWER TO ATTAIN MAXIMUM COVERAGE.

4. GENERAL CONTRACTOR SHALL ENSURE THE GPS ANTENNA HAS THE REQUIRED FULL EXPOSURE TO THE SOUTHERN HEMISPHERE/HORIZON.

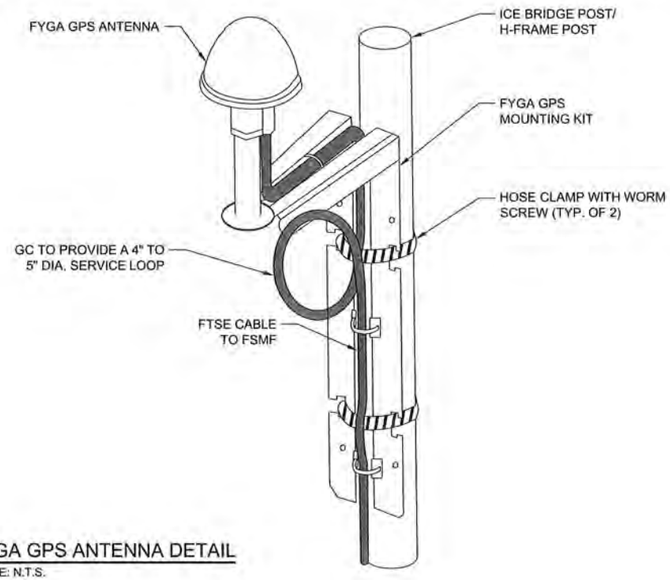

1 FYGA GPS ANTENNA DETAIL
SCALE: N.T.S.

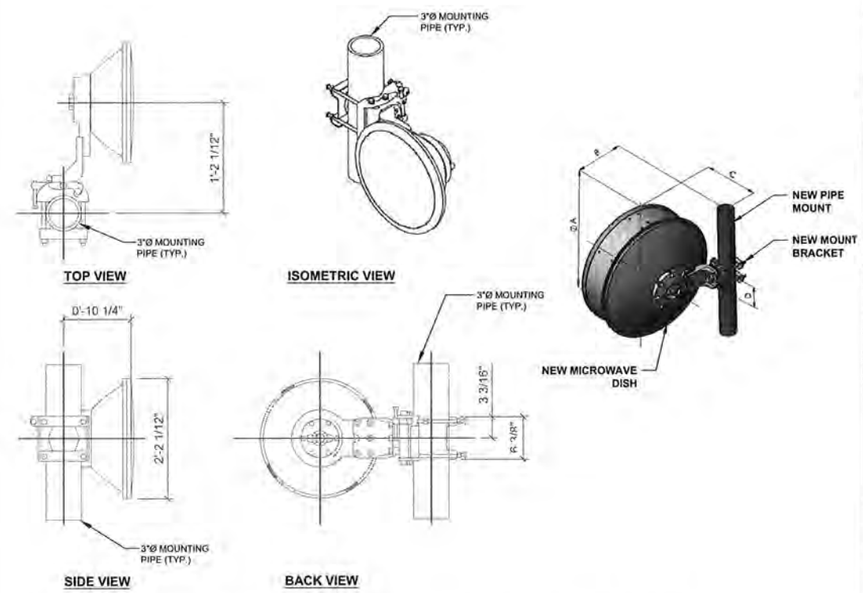

2 TYPICAL MICROWAVE DISH MOUNTING DETAIL
SCALE: N.T.S.

T-Mobile

T-MOBILE
8550 WEST BRYN MAWR AVE.
SUITE 100
CHICAGO, IL 60631
MAIN: (773) 444-5400

CONCORDIA, LTD
A PROFESSIONAL DESIGN FIRM
LICENSE # 3323-011- D.B.A.
CONCORDIA WIRELESS, INC.
361 RANDY ROAD
UNIT 101
CAROL STREAM,IL 60188
MAIN: (847) 981-0801

DRAWN BY: MS	CHECKED BY: GMS
CHECKED BY: RH	APPROVED BY: GMS

WISCONSIN
GHAZWAN M. SADAT
40304
ARLINGTON HEIGHTS, ILLINOIS
PROFESSIONAL ENGINEER

ML91205A
RIVER PARK APARTMENTS
1700 E. RIVER PARK COURT
SHOREWOOD, WI 53211

EQUIPMENT DETAILS

A-4

Sub-section	Width (mm)	Height (mm)			Depth (mm)		Qty	Volume (L)
		Filter	PA	Total	Filter	PA		
Overall w/o bosses (3-way)	387	324.5	155	479.5	132.9	151.85	1	26

Note:
1 All the dimensions do not include Flange, Screw Boss & Connectors. Stepping fin height was used separately for Volume calculate.

- 26 liters
- 26 Kg
- IP65
- -35 to +55 °C*
- 4*30W or 2*60W

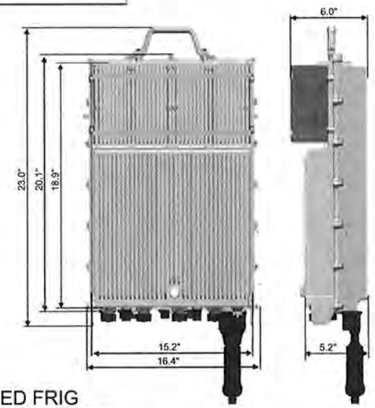

PROPOSED FRIG
SCALE: N.T.S.

Weight 7.71 kg | 19.0 lb

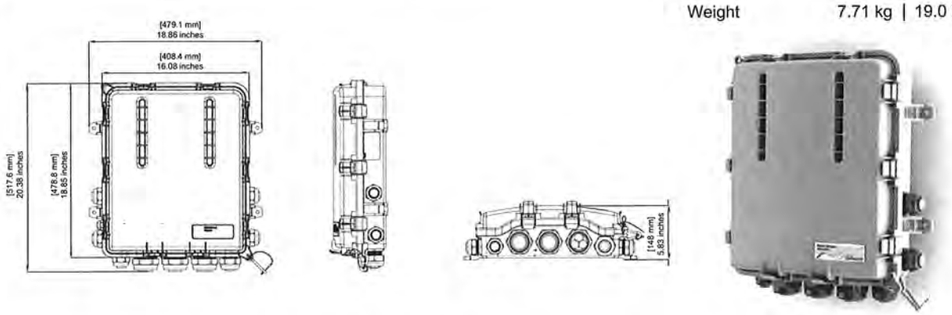

LARGE COVP (RAYCAP ASU9338TYP01)
SCALE: N.T.S.

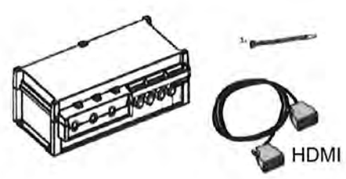

FSEB (ALARM BOX)
SCALE: N.T.S.

Flexi Multiradio BTS System Module FSMF

- < 15 liters
- < 15 kg
- 3 height units
- IP65
- -35 to +55 °C

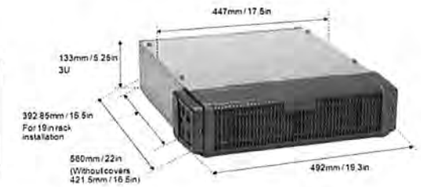

PROPOSED SYSTEM MODULE FSMF
SCALE: N.T.S.

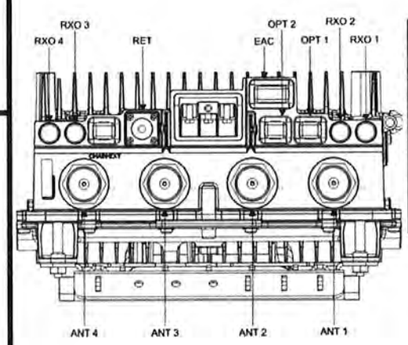

Interface	Label on the HW	Number of interfaces	Connector type
Power connector	DC IN	1	3-pole screw terminal
Antenna connector	ANT	4	7/16
RF external connector	Rx EXT	4	QMA
Remote Electrical Tilt	RET	1	8-pin circular
External Alarm Connection	EAC	1	D-sub MDR14
Optical interface	OPT	3	SFP
Local Management Port	LMP	1	2x15 pin header

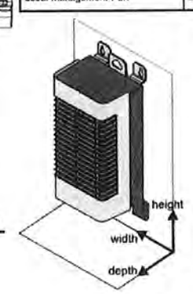

Property	Value
Height	With lower bracket: 872 mm (34.3 in.) Without lower bracket: 637 mm (25.1 in.) Without brackets: 585 mm (23.0 in.)
Depth	200 mm (7.8 in.)
Width	Without solar shield: 320 mm (12.6 in.)
Weight	With lower bracket: 23 kg (51.0 lbs) Without solar shield and mounting shroud: 22 kg (68.5 lbs)

FLEXI RRH 4-PIPE 1900 160W (FHFB)
SCALE: N.T.S.

T-Mobile

T-MOBILE
8550 WEST BRYN MAWR AVE.
SUITE 100
CHICAGO, IL 60631
MAIN: (773) 444-5400

CONCORDIA, LTD
A PROFESSIONAL DESIGN FIRM
LICENSE # 3323-011- D.B.A.
CONCORDIA WIRELESS, INC.
361 RANDY ROAD
UNIT 101
CAROL STREAM,IL 60188
MAIN: (847) 981-0801

DRAWN BY: MS	CHECKED BY: GMS
CHECKED BY: RH	APPROVED BY: GMS

WISCONSIN
GHAZWAN M. SADAT
40304
ARLINGTON HEIGHTS, ILLINOIS
PROFESSIONAL ENGINEER

ML91205A
RIVER PARK APARTMENTS
1700 E. RIVER PARK COURT
SHOREWOOD, WI 53211

EQUIPMENT SPECIFICATIONS

A-4A

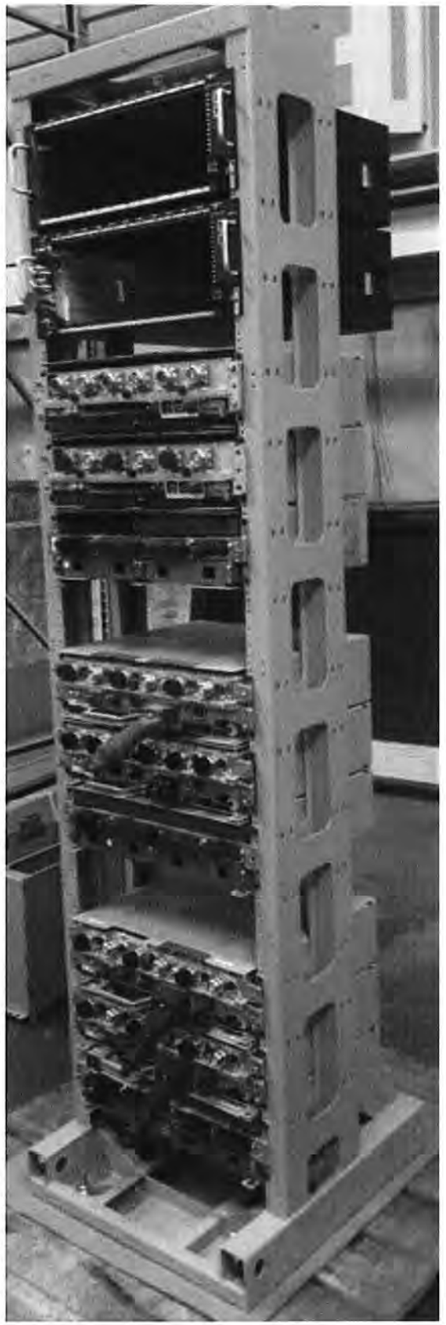

NOTES:

1. MATERIAL: HEAVY GAUGE WELDED STEEL FRAME
2. STANDARD FINISH: TELCO GRAY POWDER COAT
3. TELCORDIA GR-63-CORE TESTED FOR SEISMIC ZONE 4 QUALIFICATION.
4. TAPPED MOUNTING HOLES PROVIDED IN FRONT AND REAR FLANGES.
5. LOAD RATING: 925 LBS IN ZONE 4 SEISMIC AREAS (INCLUDES 50 LBS OF OVERHEAD CABLE).
6. EMPTY RACK WEIGHT: 147 LBS.

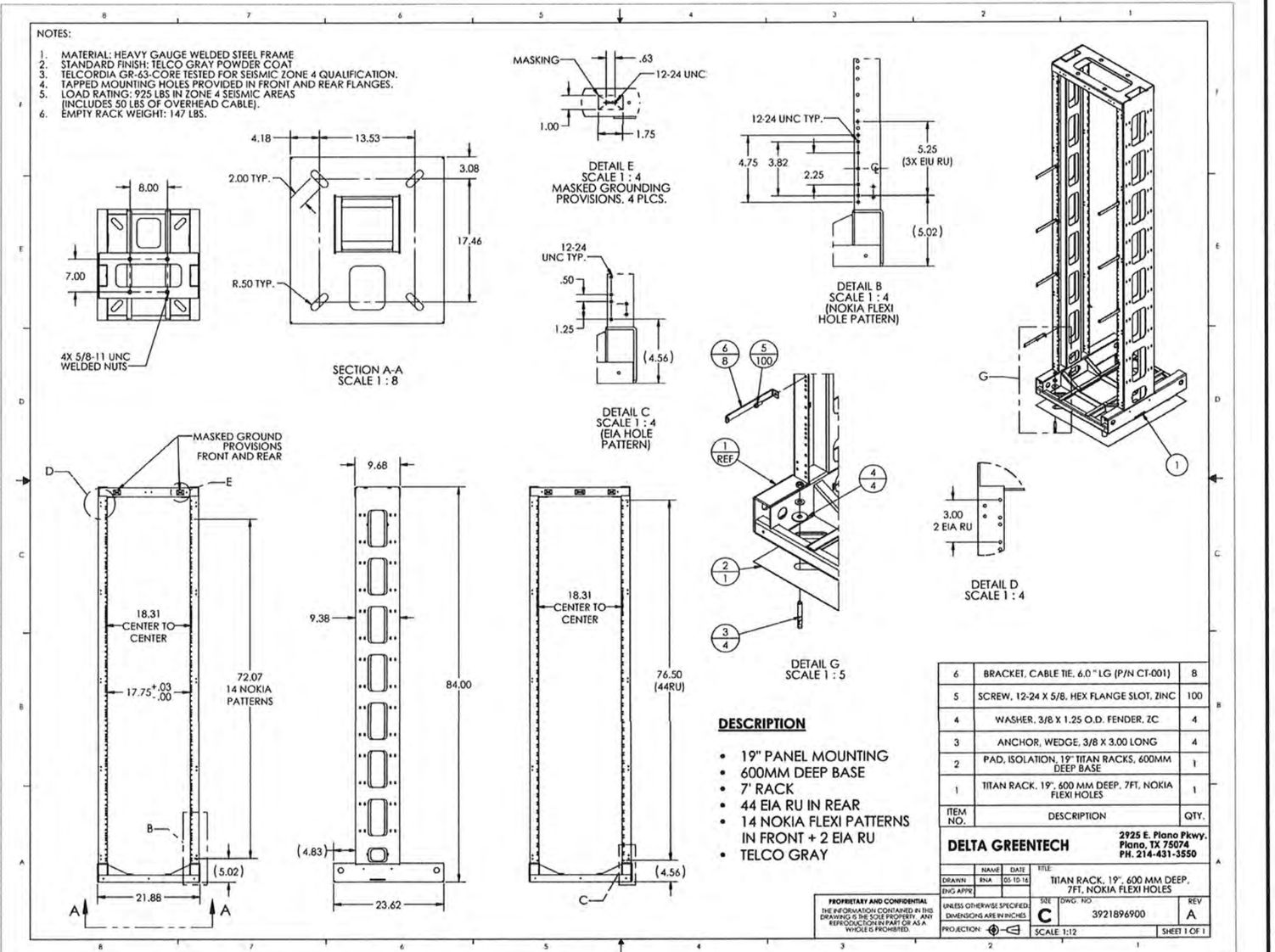

DESCRIPTION

- 19" PANEL MOUNTING
- 600MM DEEP BASE
- 7' RACK
- 44 EIA RU IN REAR
- 14 NOKIA FLEXI PATTERNS IN FRONT + 2 EIA RU
- TELCO GRAY

ITEM NO.	DESCRIPTION	QTY.
6	BRACKET, CABLE TIE, 6.0" LG (P/N CT-001)	8
5	SCREW, 12-24 X 5/8, HEX FLANGE SLOT, ZINC	100
4	WASHER, 3/8 X 1.25 O.D. FENDER, ZC	4
3	ANCHOR, WEDGE, 3/8 X 3.00 LONG	4
2	PAD, ISOLATION, 19" TITAN RACKS, 600MM DEEP BASE	1
1	TITAN RACK, 19", 600 MM DEEP, 7FT, NOKIA FLEXI HOLES	1

DELTA GREENTECH
2925 E. Plano Pkwy.
Plano, TX 75074
PH. 214-431-3550

	NAME	DATE	TITLE: TITAN RACK, 19", 600 MM DEEP, 7FT, NOKIA FLEXI HOLES
DRAWN	RNA	05-10-16	
ENG APPR			
UNLESS OTHERWISE SPECIFIED: DIMENSIONS ARE IN INCHES	SIZE C	DWG. NO. 3921896900	REV A
PROJECTION:	SCALE: 1:12		SHEET 1 OF 1

PROPRIETARY AND CONFIDENTIAL
THE INFORMATION CONTAINED IN THIS DRAWING IS THE SOLE PROPERTY. ANY REPRODUCTION IN PART OR AS A WHOLE IS PROHIBITED.

2 PANEL MOUNTING RACK EXAMPLE
N.T.S.

1 19" PANEL MOUNTING RACK SPECIFICATIONS
N.T.S.

T-MOBILE
8550 WEST BRYN MAWR AVE.
SUITE 100
CHICAGO, IL 60631
MAIN: (773) 444-5400

CONCORDIA, LTD
A PROFESSIONAL DESIGN FIRM
LICENSE # 3323-011- D.B.A.
CONCORDIA WIRELESS, INC.
361 RANDY ROAD
UNIT 101
CAROL STREAM,IL 60188
MAIN: (847) 981-0801

DRAWN BY: MS	CHECKED BY: GMS
CHECKED BY: RH	APPROVED BY: GMS

WISCONSIN
GHAZWAN M. SADAT
40304
ARLINGTON HEIGHTS ILLINOIS
PROFESSIONAL ENGINEER

ML91205A
RIVER PARK APARTMENTS
1700 E. RIVER PARK COURT
SHOREWOOD, WI 53211

19" PANEL MOUNTING RACK SPECIFICATIONS

A-4B

2 PANEL MOUNTING RACK EXAMPLE
N.T.S.

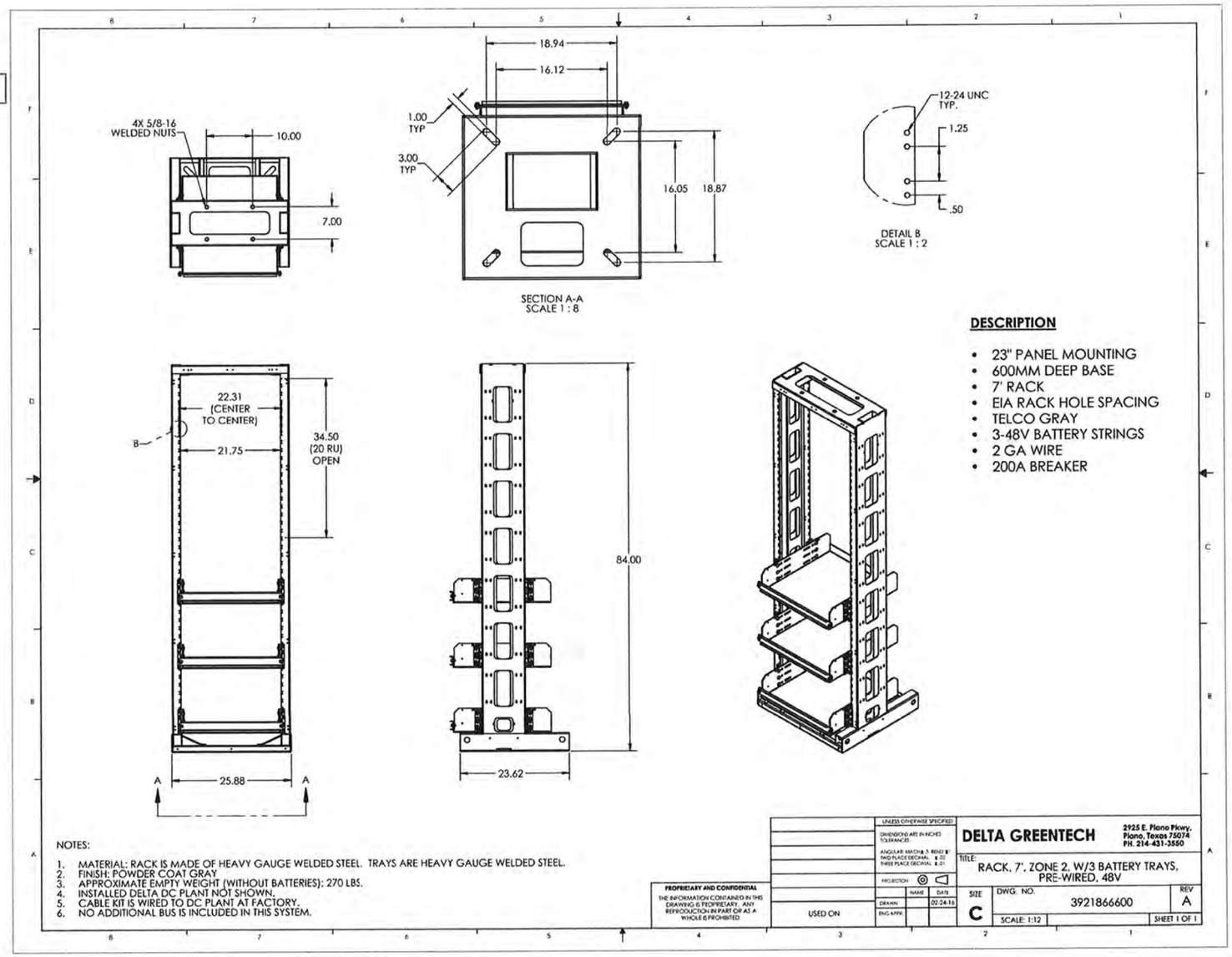

1 23", 600 MM DEEP, 7-FT RACK
N.T.S.

DESCRIPTION

- 23" PANEL MOUNTING
- 600MM DEEP BASE
- 7' RACK
- EIA RACK HOLE SPACING
- TELCO GRAY
- 3-48V BATTERY STRINGS
- 2 GA WIRE
- 200A BREAKER

T-Mobile

T-MOBILE
8550 WEST BRYN MAWR AVE.
SUITE 100
CHICAGO, IL 60631
MAIN: (773) 444-5400

CONCORDIA, LTD
A PROFESSIONAL DESIGN FIRM
LICENSE # 3323-011- D.B.A.
CONCORDIA WIRELESS, INC.
361 RANDY ROAD
UNIT 101
CAROL STREAM,IL 60188
MAIN: (847) 981-0801

DRAWN BY: MS	CHECKED BY: GMS
CHECKED BY: RH	APPROVED BY: GMS

WISCONSIN
GHAZWAN M. SADAT
40304
ARLINGTON HEIGHTS ILLINOIS
PROFESSIONAL ENGINEER

ML91205A
RIVER PARK APARTMENTS
1700 E. RIVER PARK COURT
SHOREWOOD, WI 53211

23" PANEL MOUNTING
RACK SPECIFICATIONS

A-4C

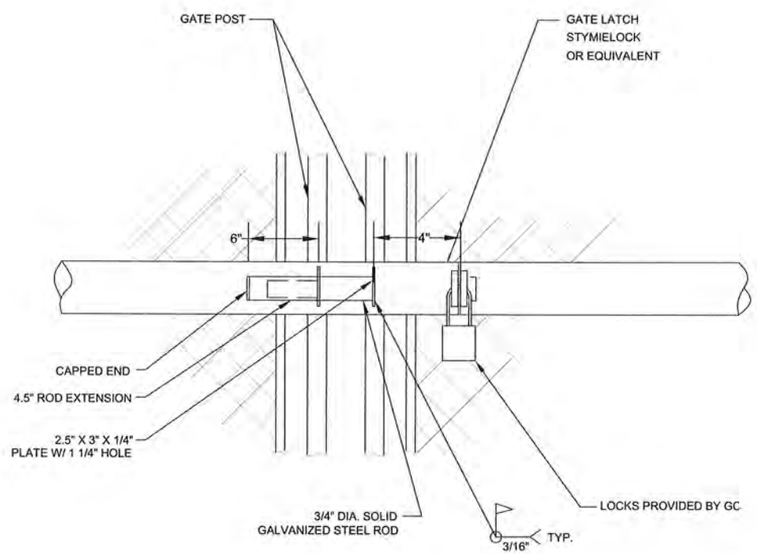

STYMIELOCK DETAIL

GENERAL NOTES

1. ALL WELDING SHALL BE COATED WITH (3) COATS OF COLD GALV. (OR EQUAL)
2. ALL OPEN POSTS SHALL HAVE END-CAPS.
3. ALL SIGNS MUST BE MOUNTED ON INSIDE OF FENCE FABRIC.

TYPICAL FENCING NOTES

(INSTALL FENCING PER ASTM F-567, SWING GATES PER ASTM F- 900)

1. GATE POST, CORNER, TERMINAL OR PULL POST FOR GATE WIDTHS UP THROUGH 6 FEET OR 14 FEET FOR DOUBLE SWING GATE PER ASTM-F 1083.
2. GATE FRAME: 2"Ø SCHEDULE 40 PIPE PER ASTM-F1083.
3. TOP RAIL & BRACE RAIL: 1-1/4" OD SCHEDULE 40 PIPE PER ASTM-F1083.
4. FABRIC: 9 GA. CORE WIRE SIZE 2 1/4" MESH, CONFORMING TO ASTM-A392.
5. TIE WIRE: MINIMUM 9 GA. GALVANIZED STEEL AT POSTS AND RAILS A SINGLE WRAP OF FABRIC TIE AND AT TENSION WIRE BY HOG RINGS SPACED MAX 24" INTERVALS.
6. TENSION WIRE: 7 GA. GALVANIZED STEEL.
7. GATE LATCH: 1-3/8" O.D. PLUNGER ROD W/ MUSHROOM TYPE CATCH AND LOCK, KEYED ALIKE FOR ALL SITES IN A GIVEN MTA.
8. ALL HARDWARE TO BE HOT DIP GALVANIZED.

NEW GATE / FENCE	FOOTINGS
CORNER POST: 2 1/2"	1/2" x 6" x 6" PLATE
GATE POST: 2 1/2"	1/2" x 6" x 6" PLATE

NOTES:

1. ALL MATERIAL TO BE HOT DIP GALVANIZED, ESPECIALLY GATE FRAME.

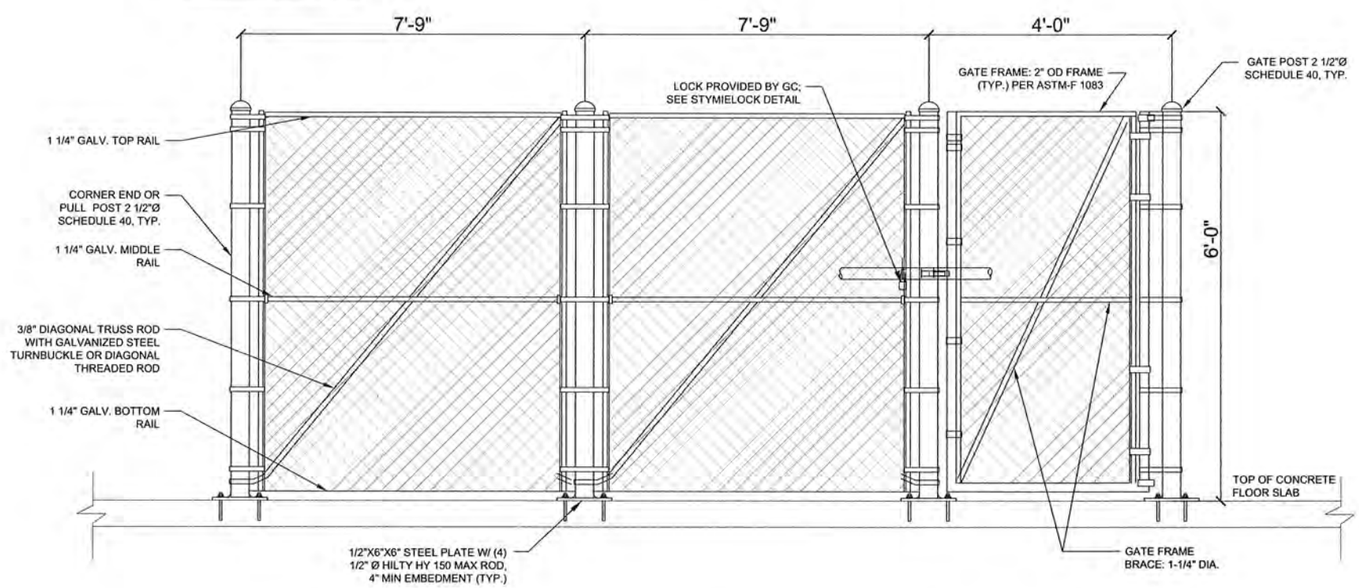

1 NEW CHAIN-LINK FENCE GATE ELEVATION
SCALE: 3/4"=1' (3/4"=2' IF 11X17 SHEET SIZE)

T-Mobile

T-MOBILE
8550 WEST BRYN MAWR AVE.
SUITE 100
CHICAGO, IL 60631
MAIN: (773) 444-5400

CONCORDIA, LTD
A PROFESSIONAL DESIGN FIRM
LICENSE # 3323-011- D.B.A.
CONCORDIA WIRELESS, INC.
361 RANDY ROAD
UNIT 101
CAROL STREAM,IL 60188
MAIN: (847) 981-0801

DRAWN BY: MS	CHECKED BY: GMS
CHECKED BY: RH	APPROVED BY: GMS

WISCONSIN
GHAZWAN M. SADAT
40304
ARLINGTON HEIGHTS ILLINOIS
PROFESSIONAL ENGINEER

ML91205A
RIVER PARK APARTMENTS
1700 E. RIVER PARK COURT
SHOREWOOD, WI 53211

CHAIN-LINK FENCE DETAILS

A-5

STRUCTURAL GENERAL NOTES

1.0 GENERAL NOTES

DESIGN AND CONSTRUCTION OF WORK SHALL CONFORM WITH APPLICABLE CODES LISTED ON SHEET T-1.

1.1 STRUCTURAL DRAWINGS ARE INTENDED TO BE USED WITH ARCHITECTURAL AND ELECTRICAL DRAWINGS. CONTRACTOR IS RESPONSIBLE FOR COORDINATING THE REQUIREMENTS OF ALL DRAWINGS INTO THEIR SHOP DRAWINGS AND WORK. CONTRACTOR SHALL SUBMIT SHOP DRAWINGS FOR ENGINEER REVIEW.

1.2 NO CHANGE IN SIZE OR DIMENSION OF STRUCTURAL MEMBERS SHALL BE MADE WITHOUT THE WRITTEN APPROVAL OF THE ENGINEER. THE CONTRACTOR IS RESPONSIBLE FOR LIMITING THE AMOUNT OF CONSTRUCTION LOAD IMPOSED UPON STRUCTURAL FRAMING. CONSTRUCTION LOADS SHALL NOT EXCEED THE CAPACITY OF THE FRAMING AT THE TIME THE LOADS ARE IMPOSED.

1.3 THE STRUCTURE IS DESIGNED TO FUNCTION AS A UNIT UPON COMPLETION. THE CONTRACTOR SHALL FURNISH ALL TEMPORARY BRACING AND/OR SUPPORTS REQUIRED AS THE RESULT OF THE CONTRACTOR'S CONSTRUCTION METHODS AND/OR SEQUENCES.

1.4 DO NOT SCALE THESE DRAWINGS, USE DIMENSIONS.

1.5 THE CONTRACTOR SHALL INFORM THE ENGINEER IN WRITING OF ANY DEVIATION FROM THE CONTRACT DOCUMENTS. THE CONTRACTOR SHALL NOT BE RELIEVED OF THE RESPONSIBILITY FOR SUCH DEVIATION BY THE ENGINEER'S APPROVAL OF SHOP DRAWINGS, PRODUCT DATA, ETC., UNLESS THE CONTRACTOR HAS SPECIFICALLY INFORMED THE ENGINEER OF SUCH DEVIATION AT THE TIME OF SUBMISSION, AND THE ENGINEER HAS GIVEN WRITTEN APPROVAL TO THE SPECIFIC DEVIATION.

1.5.1 IT IS THE EXPRESS INTENT OF THE PARTIES INVOLVED IN THIS PROJECT THAT THE CONTRACTOR OR SUBCONTRACTOR OR INDEPENDENT CONTRACTOR OR THEIR RESPECTIVE EMPLOYEES SHALL EXCULPATE THE ARCHITECT, THE ENGINEER, THE CONSTRUCTION MANAGER, THE OWNER AND THEIR AGENTS, FROM ANY LIABILITY WHATSOEVER AND HOLD THEM HARMLESS AGAINST LOSS, DAMAGES, LIABILITY OR ANY EXPENSE ARISING IN ANY MATTER FROM THE WRONGFUL OR NEGLIGENT ACT, OR FAILURE TO CARRY OUT THE WORK IN ACCORDANCE WITH THE CONTRACT DOCUMENTS, OR THE CONSTRUCTION MEANS, METHODS, TECHNIQUES, SEQUENCES OR PROCEDURES OR FAILURE TO CONFORM TO THE STATE SCAFFOLDING ACT IN CONNECTION WITH THE WORK.

1.6 ALL THINGS WHICH, IN THE OPINION OF THE CONTRACTOR, APPEAR TO BE DEFICIENCIES, OMISSIONS, CONTRADICTIONS AND AMBIGUITIES, IN THE PLANS AND SPECIFICATIONS SHALL BE BROUGHT TO THE ATTENTION OF THE ENGINEER. PLANS AND/OR SPECIFICATIONS WILL BE CORRECTED, OR A WRITTEN INTERPRETATION OF THE ALLEGED DEFICIENCY, OMISSION, CONTRADICTION OR AMBIGUITY WILL BE MADE BY THE ENGINEER BEFORE THE AFFECTED WORK PROCEEDS.

2.0 DESIGN LOAD

2.1 WIND PRESSURE

WIND PRESSURE ON ANTENNAS & MOUNTING MEMBERS	ASCE 7-05
2.2 ROOF SNOW LOAD (FOR BUILDING)	25 PSF
2.3 EQUIPMENT LOADS (INSIDE PENTHOUSE)	
DELTA 19" PANEL MOUNTING EQUIPMENT RACK	1800 LBS
DELTA 23" PANEL MOUNTING BATTERY RACK	2635 LBS
DELTA 19" PANEL MOUNTING RACK W/ MODULES	500 LBS
PPC	50 LBS
CIENA	50 LBS

3.0 STRUCTURAL STEEL NOTES

3.1 ALL STRUCTURAL STEEL WORK SHALL CONFORM TO THE AISC "SPECIFICATION FOR THE DESIGN, FABRICATION AND ERECTION OF STRUCTURAL STEEL FOR BUILDINGS", LATEST EDITION, THE AISC "CODE OF STANDARD PRACTICE FOR STEEL BUILDINGS AND BRIDGES", LATEST EDITION.

3.2 ALL STRUCTURAL STEEL PLATES, SHAPES AND BARS SHALL CONFORM TO ASTM A36, UNLESS NOTED OTHERWISE. COLD FORMED TUBING SHALL CONFORM TO ASTM A500 GRADE B. PIPES SHALL CONFORM TO ASTM A53 GRADE B. ANCHOR BOLTS SHALL CONFORM TO ASTM F1554.

3.3 ALL BOLTS (OTHER THAN ANCHOR BOLTS), NUTS AND WASHERS SHALL CONFORM TO THE REQUIREMENTS OF ASTM A325. ALL BOLTS SHALL BE 3/4 INCH DIAMETER, MINIMUM. BOLTS USED IN LATERAL LOAD RESISTING CONNECTIONS SHALL BE FRICTION TYPE, DESIGNED FOR INDICATED FORCES WITHOUT STRESS INCREASES.

3.4 ALL WELDING SHALL BE DONE BY QUALIFIED WELDERS AND SHALL CONFORM TO LAWS D1.1 "STRUCTURAL WELDING CODE", LATEST EDITION. ALL WELDING ELECTRODES SHALL BE E70XX.

3.5 ALL BEAMS SHALL BE FABRICATED WITH THE NATURAL CAMBER UP.

3.6 THERE SHALL BE NO FIELD CUTTING OF STRUCTURAL STEEL MEMBERS FOR THE WORK OF OTHER TRADES WITHOUT THE PRIOR APPROVAL OF THE STRUCTURAL ENGINEER.

3.7 STEEL BAR GRATING SHALL BE STANDARD BEARING BAR GRATE TYPE GW-125 WITH 1 1/4"x3/16" @ 1 3/16" O.C. BEARING BARS AS MANUFACTURED BY McNICHOLS (1-800-237-3620) OR EQUAL. USE STANDARD J-BOLTS AND CLIPS FOR ATTACHMENT. GRATING SADDLE CLIP FASTENERS SHALL BE ASTM A570 GRADE 36 WITH MIN. THICKNESS OF 14 GA. SELF TAPPING GRATING FASTENERS BOLTS MIN. THICKNESS OF 14 GA. SELF TAPPING GRATING FASTENERS BOLTS SHALL BE STAINLESS STEEL PER ASTM A240, TYPE 410.

3.9 A. ALL STEEL SHALL BE HOT DIPPED GALVANIZED. B. FIELD TOUCH UP ALL DISTURBED SURFACES WITH ZINC REACH PAINT. C. GRIND ALL WELDS ON HANDRAILS TO A SMOOTH FINISH.

3.10 MINIMUM SHEAR CAPACITIES: PROVIDE AT LEAST ONE HALF OF THE UNIFORM LOAD CARRYING CAPACITY OF THE BEAM WITH THE ASSUMPTION OF FULLY BRACED COMPRESSION FLANGE.

3.11 THE DEPTH OF A SIMPLE SHEAR CONNECTION SHALL NOT BE LESS THAN ONE HALF OF THE NOMINAL DEPTH OF THE BEAM. THE MINIMUM NUMBER OF BOLTS PER CONNECTION SHALL BE TWO (2).

3.12 STAIR TREADS SHALL BE ABLE TO SAFELY SUSTAIN 100 PSF LIVE LOAD OR A CONCENTRATED LOAD OF 300 LBS, APPLIED ON A 4 SQUARE INCHES AREA, WHICHEVER PRODUCES THE GREATER STRESSES.

4.0 SHOP DRAWINGS

4.1. SHOP DRAWINGS, UNLESS OTHERWISE NOTED, SHALL BE SUBMITTED FOR REVIEW PRIOR TO FABRICATIONS.

4.2. PRIOR TO SUBMITTAL, THE CONTRACTOR SHALL REVIEW THE SHOP DRAWINGS AND MAKE ANY CORRECTIONS REQUIRED. THE CONTRACTOR SHALL STAMP AND SIGN THE DRAWINGS THAT HE HAS REVIEWED THEM.

NOTES:

1. ALL EXISTING DIMENSIONS AND CONDITIONS MUST BE FIELD VERIFIED PRIOR TO FABRICATION
2. USE MASONRY BITS FOR DRILLING & NO CUTTING/DAMAGING OF REBARS IS ALLOWED
3. ATTACH CABINETS DIRECTLY TO STRUCTURAL STEEL PER MANUFACTURER RECOMMENDATIONS BUT NOT LESS THAN ONE 1/2"Ø BOLT AT EACH CORNER.

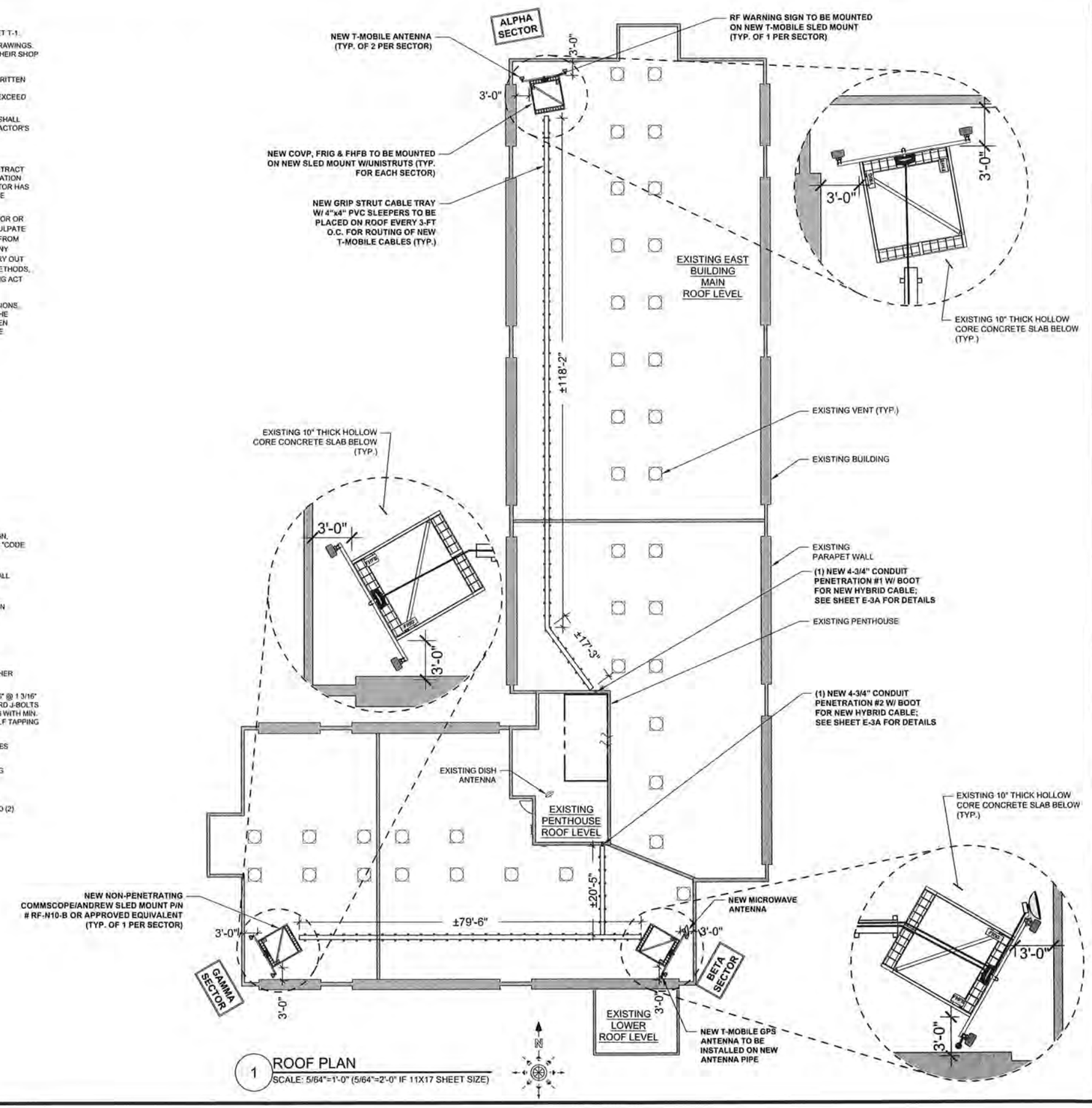

1 ROOF PLAN
SCALE: 5/64"=1'-0" (5/64"=2'-0" IF 11X17 SHEET SIZE)

T-Mobile

T-MOBILE
8550 WEST BRYN MAWR AVE.
SUITE 100
CHICAGO, IL 60631
MAIN: (773) 444-5400

CONCORDIA, LTD
A PROFESSIONAL DESIGN FIRM
LICENSE # 3323-011- D.B.A.
CONCORDIA WIRELESS, INC.
361 RANDY ROAD
UNIT 101
CAROL STREAM,IL 60188
MAIN: (847) 981-0801

DRAWN BY: MS	CHECKED BY: GMS
CHECKED BY: RH	APPROVED BY: GMS

WISCONSIN
GHAZWAN M. SADAT
40304
ARLINGTON HEIGHTS ILLINOIS
PROFESSIONAL ENGINEER

ML91205A
RIVER PARK APARTMENTS
1700 E. RIVER PARK COURT
SHOREWOOD, WI 53211

SSC MOUNTING DETAILS AND STRUCTURAL STEEL NOTES

S-1

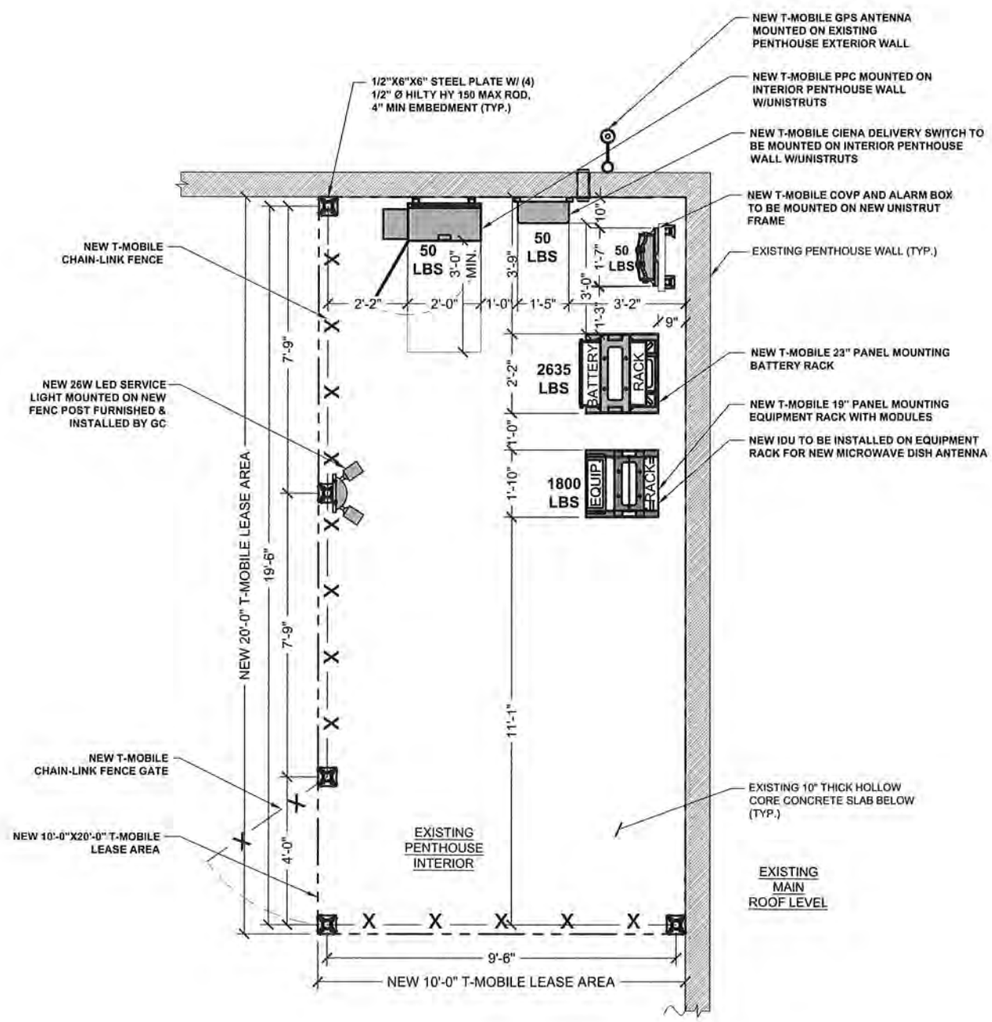

1 EQUIPMENT LAYOUT (PENTHOUSE LEVEL)

SCALE: 1/2=1'-0" (1/2"=2'-0" IF 11 X 17 SHEET SIZE)

T-Mobile

T-MOBILE
8550 WEST BRYN MAWR AVE.
SUITE 100
CHICAGO, IL 60631
MAIN: (773) 444-5400

CONCORDIA, LTD
A PROFESSIONAL DESIGN FIRM
LICENSE # 3323-011- D.B.A.

CONCORDIA WIRELESS, INC.

361 RANDY ROAD
UNIT 101
CAROL STREAM,IL 60188
MAIN: (847) 981-0801

DRAWN BY: MS	CHECKED BY: GMS
CHECKED BY: RH	APPROVED BY: GMS

WISCONSIN
GHAZWAN M. SADAT
40304
ARLINGTON HEIGHTS ILLINOIS
PROFESSIONAL ENGINEER

ML91205A
RIVER PARK APARTMENTS
1700 E. RIVER PARK COURT
SHOREWOOD, WI 53211

EQUIPMENT LAYOUT

S-1A

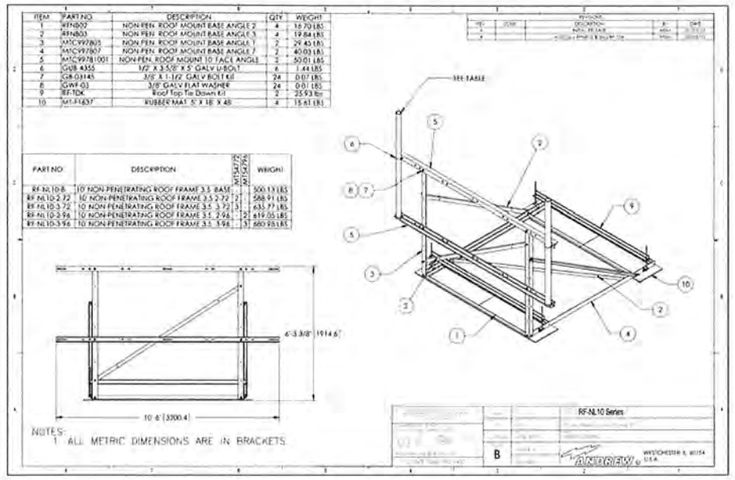

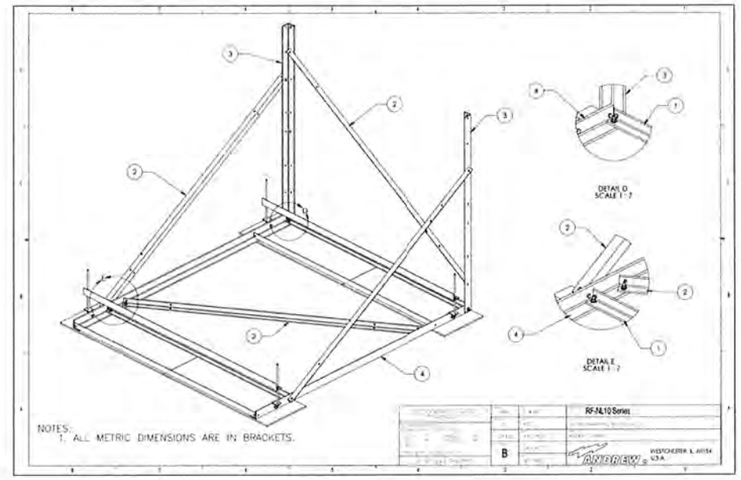

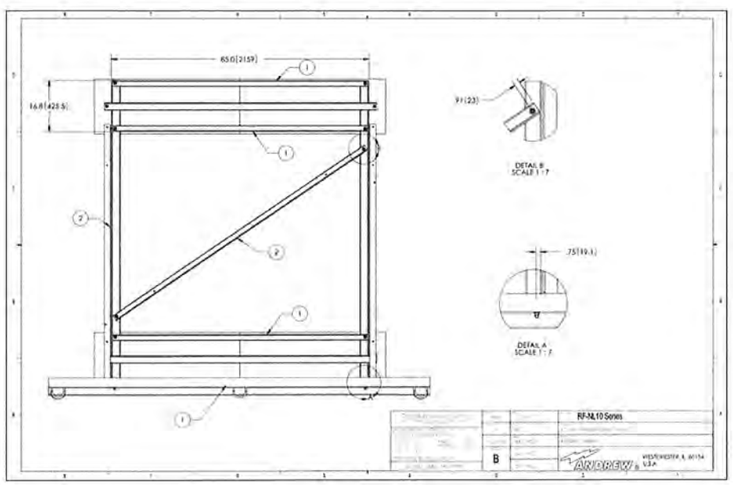

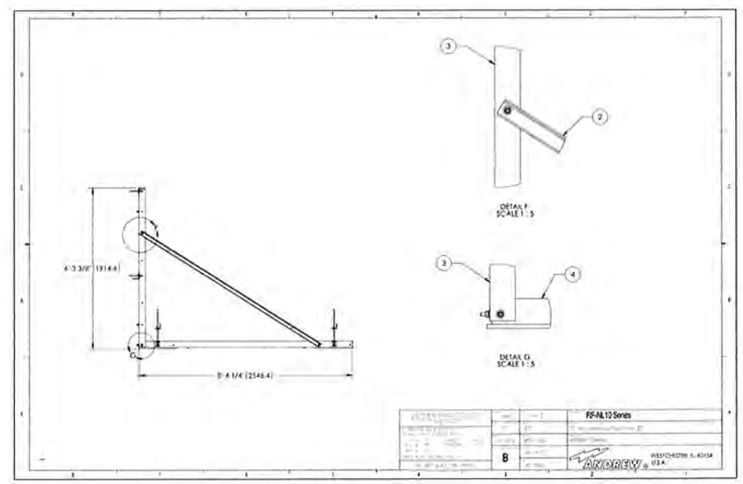

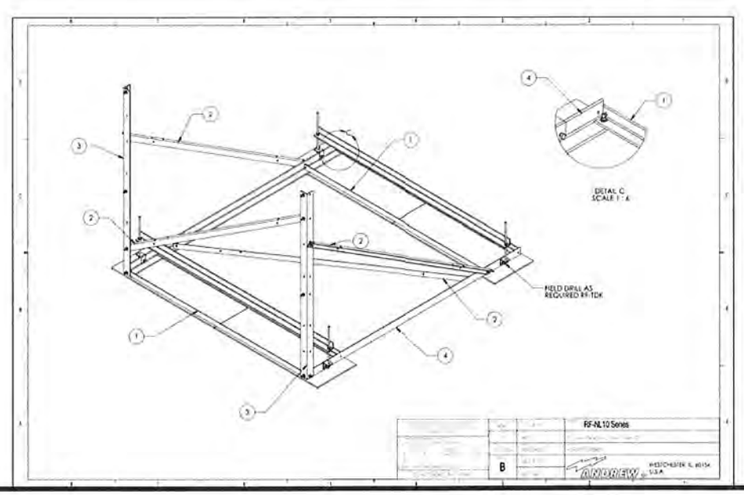

1 NEW SLED MOUNT DETAILS (PART#RF-NL10-B BY COMMSCOPE)
SCALE: NTS

RF-NL10-B

Non-Penetrating Roof Frame, 10 ft face, pipe not included

Dimensions

Face Width	266.7 mm	10.5 in
Height	1905.0 mm	75.0 in
Length	2540.0 mm	100.0 in
Pipe Outer Diameter	88.9 mm	3 1/2 in
Width	3200.4 mm	126.0 in
Weight	227.0 kg	500.4 lb

MT-651-96

Plain End Pipe, 2-3/8 in OD x 96 in

Dimensions

Pipe Outer Diameter	60.3 mm	2 3/8 in
Height	60.3 mm	2.4 in
Length	2438.4 mm	96.0 in
Weight	15.2 kg	33.5 lb
Width	60.3 mm	2.4 in

General Specifications

Material Type	Hot dip galvanized steel
Pipe Length	2438.4 mm | 96.0 in
Product Type	Bulk pipe
Includes	Pipe
Package Quantity	1
Pipe, quantity	1

2 PLAIN END PIPE, 2-3/8 IN OD X 96" (COMMSCOPE PART# MT-651-96)
SCALE: NTS

T-MOBILE
8550 WEST BRYN MAWR AVE.
SUITE 100
CHICAGO, IL 60631
MAIN: (773) 444-5400

CONCORDIA, LTD
A PROFESSIONAL DESIGN FIRM
LICENSE # 3323-011- D.B.A.
CONCORDIA WIRELESS, INC.
361 RANDY ROAD
UNIT 101
CAROL STREAM,IL 60188
MAIN: (847) 981-0801

DRAWN BY: MS	CHECKED BY: GMS
CHECKED BY: RH	APPROVED BY: GMS

WISCONSIN
GHAZWAN M. SADAT
40304
ARLINGTON HEIGHTS ILLINOIS
PROFESSIONAL ENGINEER

ML91205A
RIVER PARK APARTMENTS
1700 E. RIVER PARK COURT
SHOREWOOD, WI 53211

NEW ANTENNA SLED MOUNT DETAILS

S-2

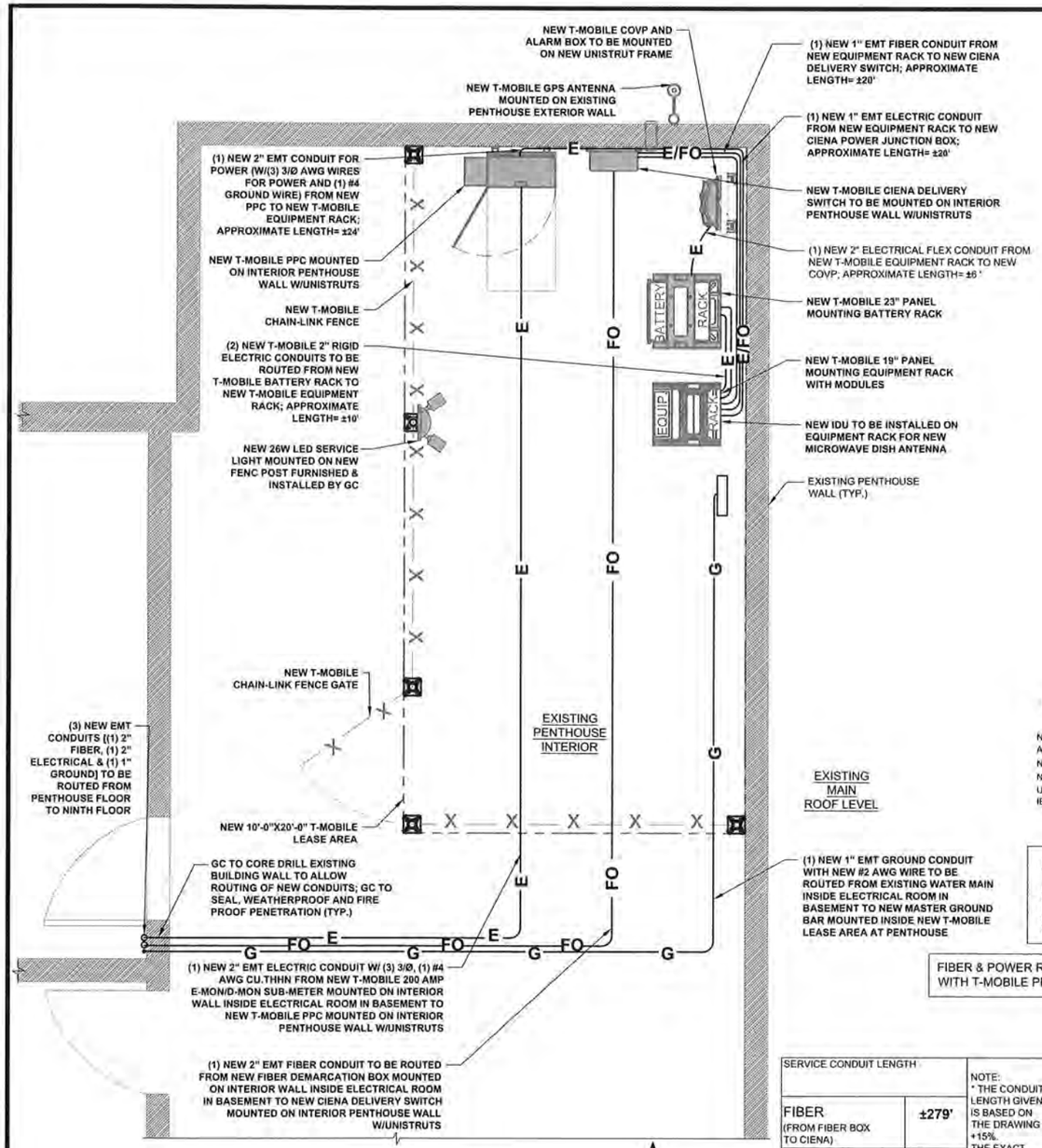

1 EQUIPMENT LAYOUT (PENTHOUSE FLOOR)
SCALE: 1/2=1'-0" (1/2"=2'-0" IF 11 X 17 SHEET SIZE)

BIDDING & CONSTRUCTION NOTE:

WIRE SIZES SHOWN ARE ESTIMATED MINIMUMS. IT IS THE ELECTRICAL CONTRACTOR'S RESPONSIBILITY TO IDENTIFY AND COMPLY WITH THE APPLICABLE LOCAL ELECTRICAL AND BUILDING CODES IN ADDITION TO NEC 2008 AND FOLLOW WHICHEVER IS MORE CONSERVATIVE. CONTRACTOR SHALL ESTIMATE PHASE CONDUCTOR SIZE & UTILIZE THE APPROPRIATE WIRE SIZE AND TYPE ASSUMING A 2% VOLTAGE DROP. CONTRACTOR TO CONFIRM WITH LOCAL ELECTRICAL INSPECTOR PRIOR TO CONSTRUCTION. NOTIFY ENGINEER OF DISCREPANCIES PRIOR TO CONSTRUCTION START.

LEGEND

-- UF --	UNDERGROUND FIBER OPTIC CABLE
— FO —	FIBER OPTIC CABLE
-- UE --	UNDERGROUND ELECTRIC CONDUIT
— E —	ELECTRIC CONDUIT

GENERAL ELECTRICAL NOTES

1.)NATIONAL ELECTRIC CODE, LATEST EDITION .
2.)ALL ELECTRICAL MATERIALS, EQUIPMENT AND INSTALLATION PROSEDURES TO CONFORM WITH LOCAL JURISDICTION REQUIREMENTS.
3.)CONTRACTOR SHALL PERFORM ALL VERIFICATION TESTS AND EXAMINATION WORK PRIOR TO THE ORDERING OF THE ELECTRICAL EQUIPMENT AND THE ACTUAL CONSTRUCTION. CONTRACTOR SHALL ISSUE A WRITTEN NOTICE OF ALL FINDINGS TO THE ENGINEER LISTING ALL MALFUNCTIONS, FAULTY EQUIPMENT & DISCREPANCIES.
4.)ELECTRICAL PLANS, DETAILS, AND DIAGRAMS ARE DIAGRAMMATIC ONLY. FIELD CONDITIONS DICTATE THE AMOUNT AND LOCATION OF EQUIPMENT.
5.)ALL MATERIALS SHALL BE MANUFACTURED IN ACCORDANCE WITH APPLICABLE STANDARDS ESTABLISHED BY ANSI, NEMA, NFPA, AND "UL" LISTED.
6.)THE ENTIRE ELECTRICAL INSTALLATION SHALL BE GROUNDED AS REQUIRED BY UBC, NEC, T-MOBILE, AND ALL APPLICABLE LOCAL CODES.
7.)ALL CIRCUIT BREAKERS, FUSES AND ELECTRICAL EQUIPMENT SHALL HAVE A MINIMUM INTERRUPTING RATING OF 20,000 AIC WHERE APPLICABLE.
8.)PATCH, REPAIR AND PAINT ANY AREA THAT HAS BEEN DAMAGED IN THE COURSE OF THE ELECTRICAL WORK.
9.)PROVIDE T-MOBILE WITH ONE SET OF COMPLETE ELECTRICAL"AS-BUILT" DRAWINGS AT THE COMPLETION OF THE JOB SHOWING ACTUAL ROUTINGS AND WIRING CONNECTIONS.
10.)LABEL ALL ELECTRICAL EQUIPMENT PER T-MOBILE SPECIFICATIONS.
11.)ALL SINGLE- PHASE SELF- CONTAINED METER CONNECTION DEVICES MUST INCLUDE HORN TYPE BY-PASS PROVISION SO THAT SERVICE WILL NOT BE INTERRUPTED WHEN A METER IS REMOVED FROM THE SOCKET.
12.)ALL ABOVE GROUND CONDUITS AND BUSHING SHALL BE RGS.
13.) ALL WORK IS TO COMPLY WITHE NATIONAL ELECTRICAL CODE (NEC) & ANY ORDINANCES, CODES & ALL OTHER ADMINISTRATIVE AUTHORITIES HAVING JURISDICTION. THE CONTRACTOR SHALL FURNISH & PAY FOR ALL PERMITS & RELATED FEES.
14.) ALL EQUIPMENT & MATERIALS FURNISHED & INSTALLED UNDER THIS CONTRACT SHALL BE UNDERWRITERS LABORATORIES (U.L.) LISTED, NEW, FREE FROM DEFECTS, & SHALL BE GUARANTEED FOR A PERIOD OF ONE YEAR FROM DATE OF FINAL ACCEPTANCE BY OWNER OR HIS REPRESENTATIVE. SHOULD ANY TROUBLE DEVELOP DURING THIS PERIOD DUE TO FAULTY WORKMANSHIP, MATERIALS OR EQUIPMENT, THE CONTRACTOR SHALL FURNISH ALL NECESSARY MATERIALS & LABOR TO CORRECT THE TROUBLE WITHOUT COST TO THE OWNER.
15.) ALL WORK SHALL BE EXECUTED IN A WORKMAN LIKE MANNER & SHALL PRESENT A NEAT MECHANICAL APPEARANCE WHEN COMPLETED. THE CONTRACTOR SHALL BE RESPONSIBLE FOR ALL CUTTING & PATCHING RELATED TO ELECTRICAL WORK, & SHALL RESTORE ALL EXISTING LANDSCAPING, SPRINKLER SYSTEMS, CONDUITS, WIRING, PIPING, ETC. DAMAGED BY THE ELECTRICAL WORK TO MATCH EXISTING CONDITIONS.
16.) ELECTRICAL WORK SHALL INCLUDE, BUT NOT BE LIMITED TO, ALL LABOR, MATERIALS & EQUIPMENT REQUIRED TO COMPLETE ELECTRICAL POWER & LIGHTING SYSTEMS, TELEPHONE & COMMUNICATIONS SYSTEMS, PANEL BOARDS, CONDUIT, CONTROL WIRING, GROUNDING, ETC. AS INDICATED ON ELECTRICAL DRAWINGS &/OR AS REQUIRED BY GOVERNING CODES.
17.) GC TO HIRE PUBLIC UNCC & PRIVATE LOCATE SERVICE IN ORDER TO LOCATE AND PROTECT ANY AND ALL SURFACE UTILITIES. DO NOT SCALE OFF THESE PLANS FOR ANY BELOW GRADE UTILITIES.
18.) THESE PLANS MAY NOT CONTAIN OR REVEAL ALL SUBSURFACE UTILITIES; GC IS RESPONSIBLE OF LOCATING AND PROTECTING ALL UTILITIES DURING CONSTRUCTION.
19.) GC WILL NOT START CONSTRUCTION UNTIL AFTER THEY RECEIVE THE PRE CON PACKAGE AND HAVE A PRE CON WALK WITH THE PM.
20.) GC TO PROTECT ALL UNDERGROUND UTILITIES DURING CONSTRUCTION

CODES AND STANDARDS

NEC	NATIONAL ELECTRICAL CODE
ANSI	AMERICAN NATIONAL STANDARDS INSTITUTE
NEMA	NATIONAL ELECTRICAL MANUFACTURERS ASSOCIATION
NFPA	NATIONAL FIRE PROTECTION ASSOCIATION
UL	UNDERWRITERS LABORATORIES, INC.
IBC	INTERNATIONAL BUILDING CODE BUILDING OFFICIAL AND CODE ADMINISTRATORS

ABBREVIATIONS

AIC	AMPS INTERRUPTING CAPACITY	GEN	GENERATOR
AWG	AMERICAN WIRE GAUGE	GND	GROUND
BCW	BARE COPPER WIRE	GPS	GLOBAL POSITIONING SYSTEM
BTS	BASE TRANSMISSION SYSTEM	O/H	OVERHEAD
C	CONDUIT	PCS	PERSONAL COMMUNICATION SYSTEM
CAB	CABINET	PPC	POWER PROTECTION CABINET
DISC	DISCONNECT SWITCH	RGS	EMT GALVANIZED STEEL
DWG	DRAWING	TYP	TYPICAL
ELEC	ELECTRICAL	UG	UNDERGROUND GAS
EMT	ELECTRICAL METALLIC TUBING	UW	UNDERGROUND WATER
		SS	STORM SEWER

IMPORTANT NOTE:

ALL UNISTRUT, FASTENERS, HARDWARE, ETC; ARE TO BE EITHER HOT-DIPPED GALVANIZED OR STAINLESS STEEL. GENERAL CONTRACTOR SHALL NOT USE ZINC-PLATED OR PRE-GALVANIZED

FIBER & POWER ROUTES TO BE CONFIRMED WITH T-MOBILE PRIOR TO CONSTRUCTION START

SERVICE CONDUIT LENGTH		NOTE:
FIBER (FROM FIBER BOX TO CIENA)	±279'	* THE CONDUIT LENGTH GIVEN IS BASED ON THE DRAWING +15%. THE EXACT LENGTH TO BE VERIFIED IN FIELD. GC TO VERIFY LENGTHS AFTER COORDINATING W/ SERVICE UTILITY COMPANIES.
ELECTRIC (FROM EXISTING SWITCH GEAR TO SUB-METER)	±38'	
ELECTRIC (FROM SUB-METER TO PPC)	±279'	
GROUND (FROM WATER MAIN TO GROUND BAR)	±252'	
GROUND (FROM WATER MAIN TO SUB-METER)	±71'	
ALL CONDUITS INCLUDE 15% EXTRA		

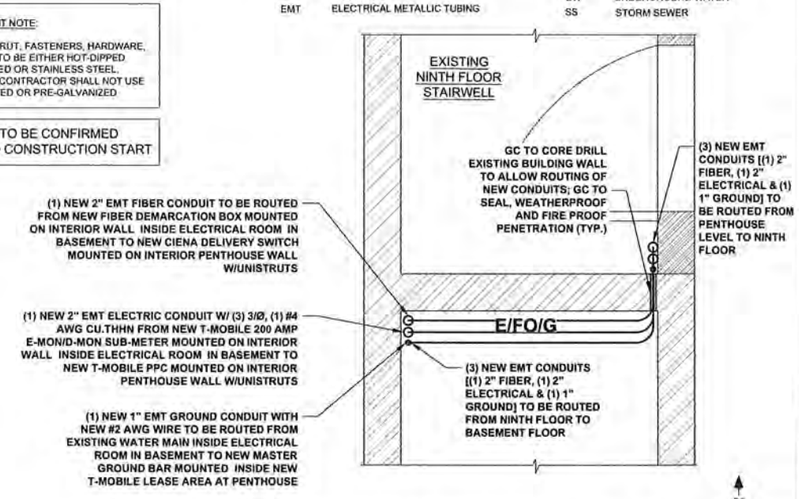

2 NEW UTILITY ROUTING PLAN (NINTH FLOOR)
SCALE: 3/4"=1'-0" (3/4"=2'-0" IF 11x17 SHEET SIZE)

T-Mobile

T-MOBILE
8550 WEST BRYN MAWR AVE.
SUITE 100
CHICAGO, IL 60631
MAIN: (773) 444-5400

CONCORDIA, LTD
A PROFESSIONAL DESIGN FIRM
LICENSE # 3323-011- D.B.A.
CONCORDIA WIRELESS, INC.
361 RANDY ROAD
UNIT 101
CAROL STREAM,IL 60188
MAIN: (847) 981-0801

DRAWN BY: MS	CHECKED BY: GMS
CHECKED BY: RH	APPROVED BY: GMS

WISCONSIN
GHAZWAN M. SADAT
40304
ARLINGTON HEIGHTS ILLINOIS
PROFESSIONAL ENGINEER

ML91205A
RIVER PARK APARTMENTS
1700 E. RIVER PARK COURT
SHOREWOOD, WI 53211

UTILITY SITE PLAN AND DETAILS

E-1

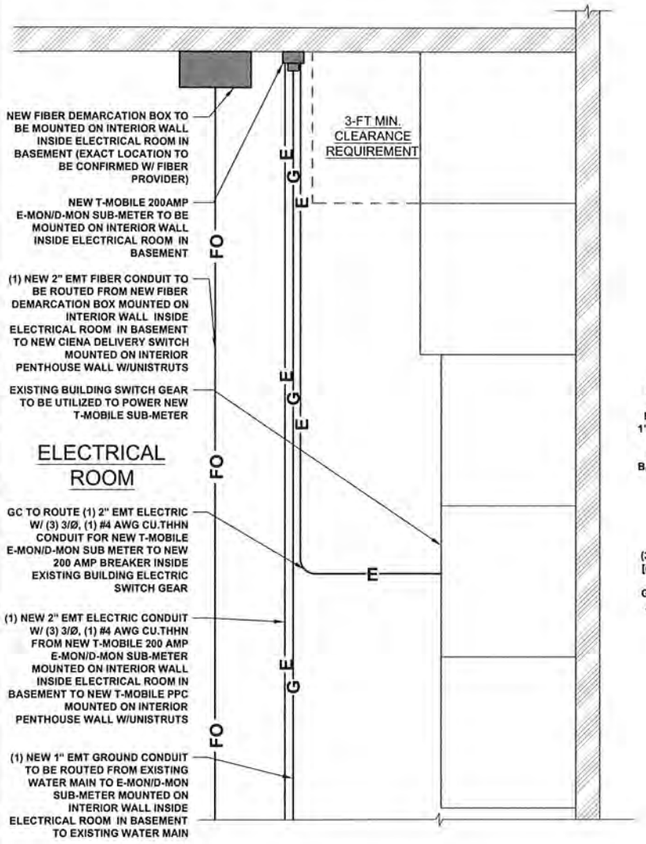

1 ENLARGED NEW UTILITY ROUTING PLAN (BASEMENT)
SCALE:1/2"=1'-0" (1/2"=2'-0" IF 11x17 SHEET SIZE)

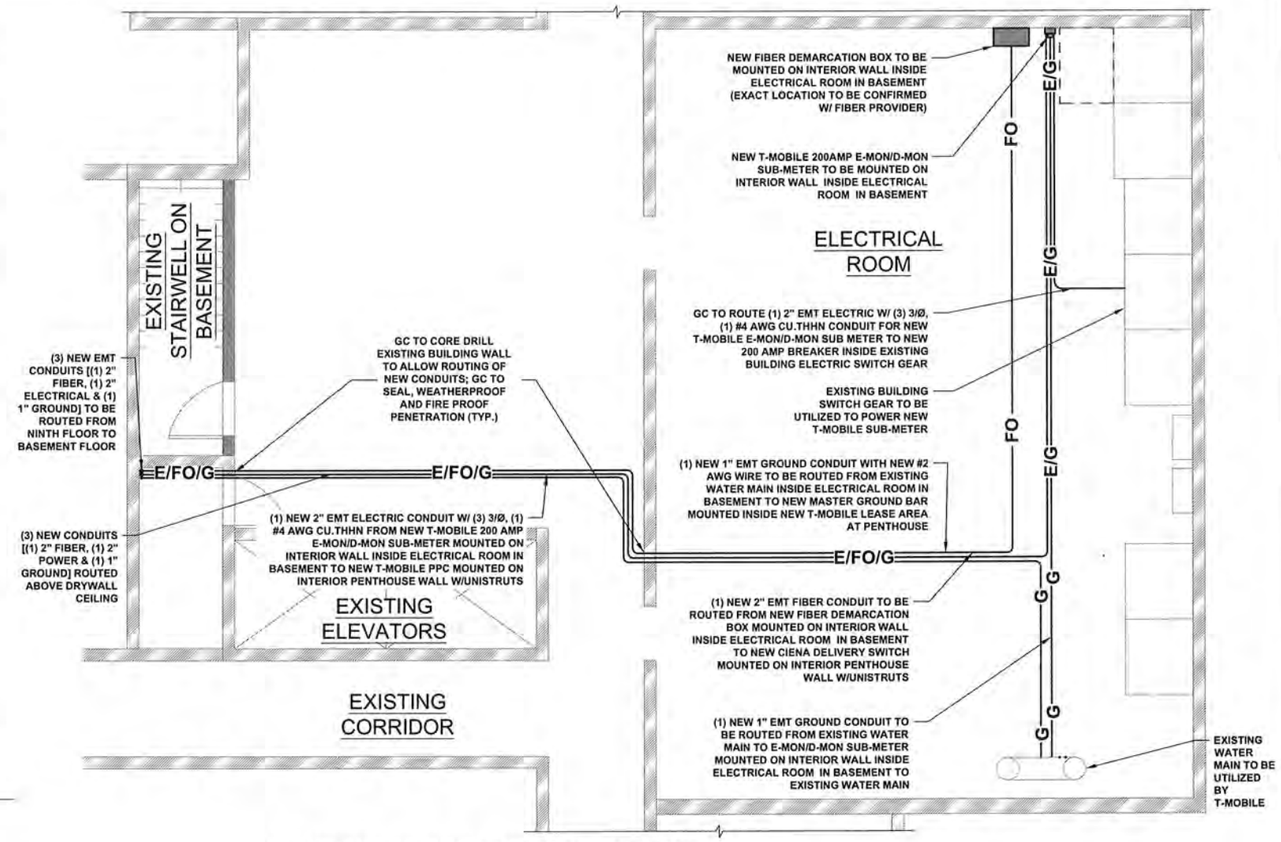

2 NEW UTILITY ROUTING PLAN (BASEMENT)
SCALE:1/4"=1'-0" (1/4"=2'-0" IF 11x17 SHEET SIZE)

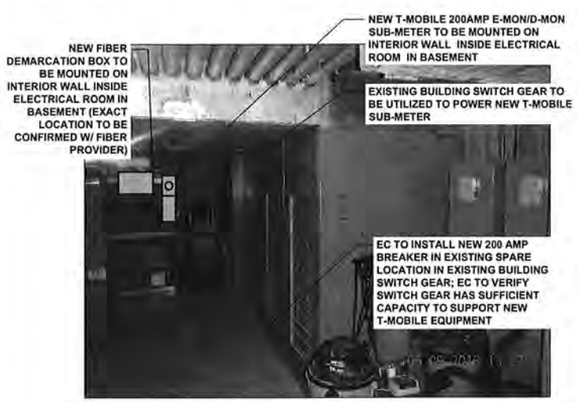

3 ENLARGED NEW UTILITY ROUTING (BASEMENT)
SCALE: N.T.S.

4 ENLARGED NEW UTILITY ROUTING (BASEMENT)
SCALE: N.T.S.

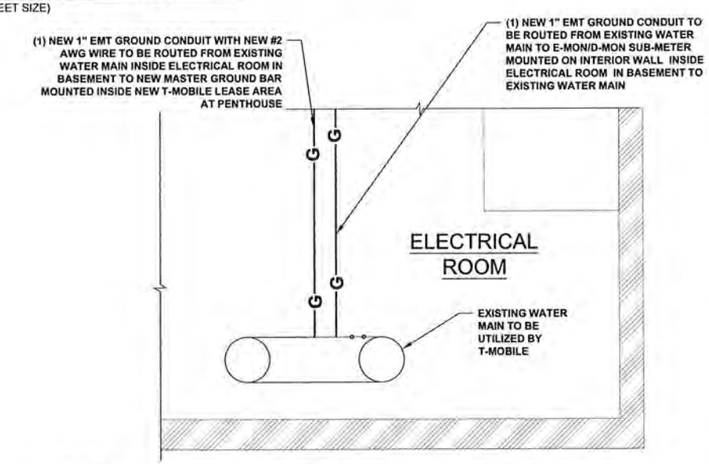

5 ENLARGED NEW UTILITY ROUTING PLAN (BASEMENT)
SCALE:1/2"=1'-0" (1/2"=2'-0" IF 11x17 SHEET SIZE)

T-Mobile

T-MOBILE
8550 WEST BRYN MAWR AVE.
SUITE 100
CHICAGO, IL 60631
MAIN: (773) 444-5400

CONCORDIA, LTD
A PROFESSIONAL DESIGN FIRM
LICENSE # 3323-011- D.B.A.
CONCORDIA WIRELESS, INC.
361 RANDY ROAD
UNIT 101
CAROL STREAM,IL 60188
MAIN: (847) 981-0801

DRAWN BY: MS	CHECKED BY: GMS
CHECKED BY: RH	APPROVED BY: GMS

WISCONSIN
GHAZWAN M. SADAT
40304
ARLINGTON HEIGHTS ILLINOIS
PROFESSIONAL ENGINEER

ML91205A
RIVER PARK APARTMENTS
1700 E. RIVER PARK COURT
SHOREWOOD, WI 53211

NEW UTILITY ROUTING PLAN

E-1A

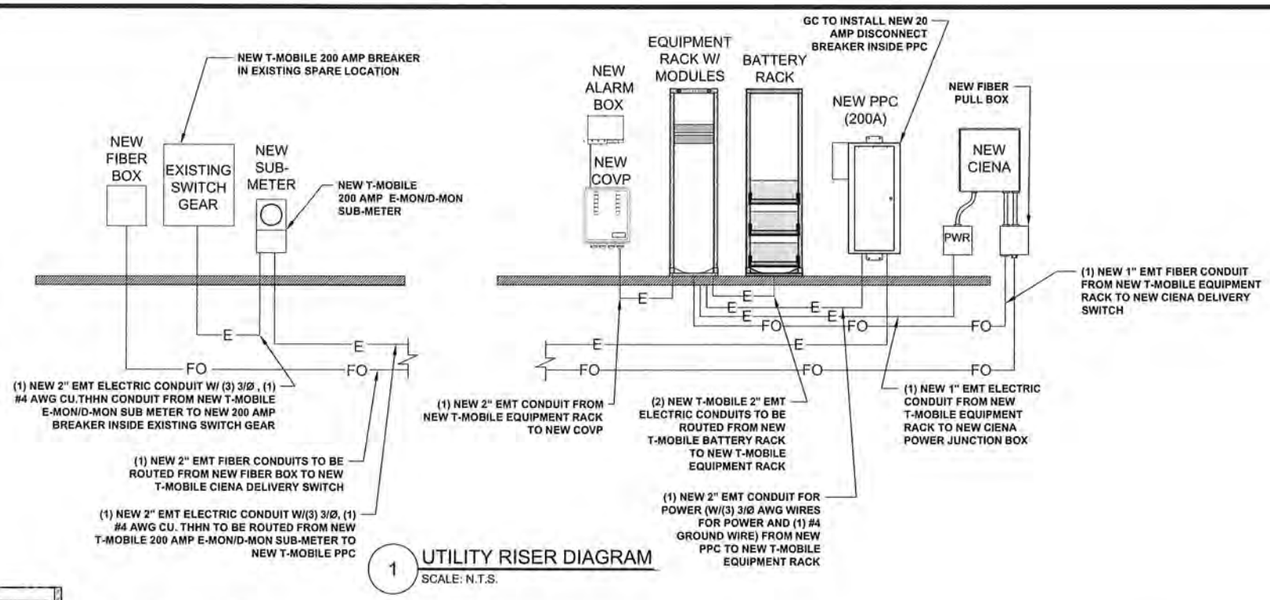

1 UTILITY RISER DIAGRAM
SCALE: N.T.S.

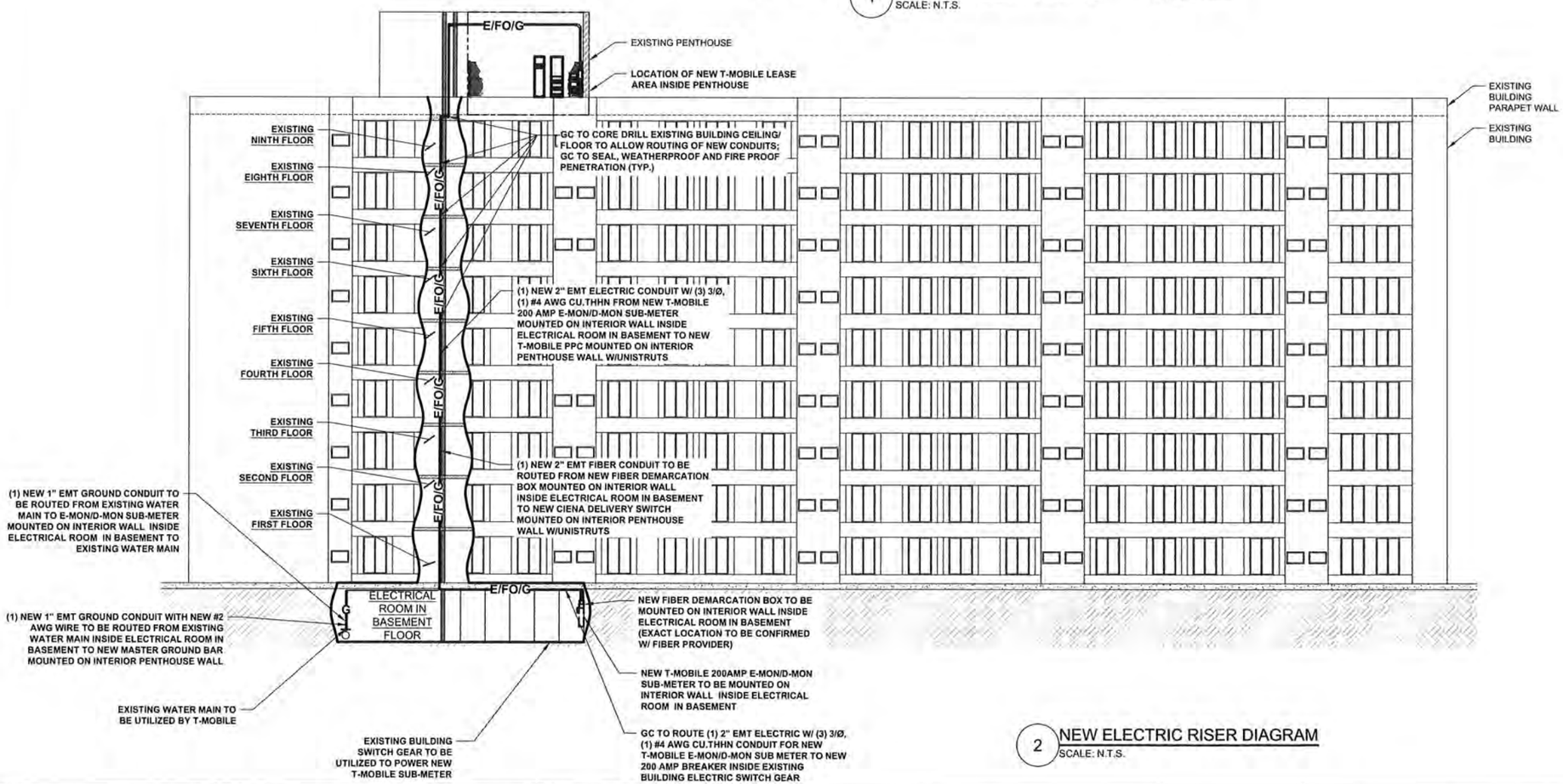

2 NEW ELECTRIC RISER DIAGRAM
SCALE: N.T.S.

T-Mobile

T-MOBILE
8550 WEST BRYN MAWR AVE.
SUITE 100
CHICAGO, IL 60631
MAIN: (773) 444-5400

CONCORDIA, LTD
A PROFESSIONAL DESIGN FIRM
LICENSE # 3323-011- D.B.A.
CONCORDIA WIRELESS, INC.
361 RANDY ROAD
UNIT 101
CAROL STREAM,IL 60188
MAIN: (847) 981-0801

DRAWN BY: MS	CHECKED BY: GMS
CHECKED BY: RH	APPROVED BY: GMS

WISCONSIN
GHAZWAN M. SADAT
40304
ARLINGTON HEIGHTS ILLINOIS
PROFESSIONAL ENGINEER

ML91205A
RIVER PARK APARTMENTS
1700 E. RIVER PARK COURT
SHOREWOOD, WI 53211

UTILITY RISER DIAGRAM

E-2

NOTES ON FIBER & POWER COORDINATION

ROUTING SHOWN IS BASED ON ASSUMPTIONS FROM VISUAL FIELD OBSERVATIONS OF EXISTING POLES & TRANSFORMERS. THESE PLANS MAY OR MAY NOT REFLECT AND/OR CONTAIN THE FINAL SCENARIO FOR POWER OR FIBER ROUTING. THE ELECTRICAL DESIGN SHOWN IS FOR PERMITTING PURPOSES ONLY AND IS NOT FOR CONSTRUCTION. ADDITIONAL TRANSFORMER MAY BE REQUIRED. LONGER LEAD TIMES MAY BE POSSIBLE. CONCORDIA IS NOT RESPONSIBLE FOR CODE COMPLIANCE OR COMPLIANCE W/ POWER CODE. ELECTRICIAN IS REQUIRED TO CONFIRM COMPLIANCE OF SITE W/ LOCAL, COUNTY, STATE AND/OR NATIONAL ELECTRICAL CODES. THE MOST RESTRICTIVE OF SUCH CODES SHALL GOVERN AND BE APPLICABLE. THE DESIGN SHOWN ON THESE PLANS IS SUBJECT TO VERIFICATION AND APPROVAL BY T-MOBILE & GC. GC SHALL BE RESPONSIBLE FOR VERIFYING FINAL SCENARIO & CODE COMPLIANCE & IS RESPONSIBLE FOR ***COORDINATING WITH T-MOBILE POWER COORDINATOR.***
GC SHALL BID ON THESE PLANS USING THE WORST CASE SCENARIO.

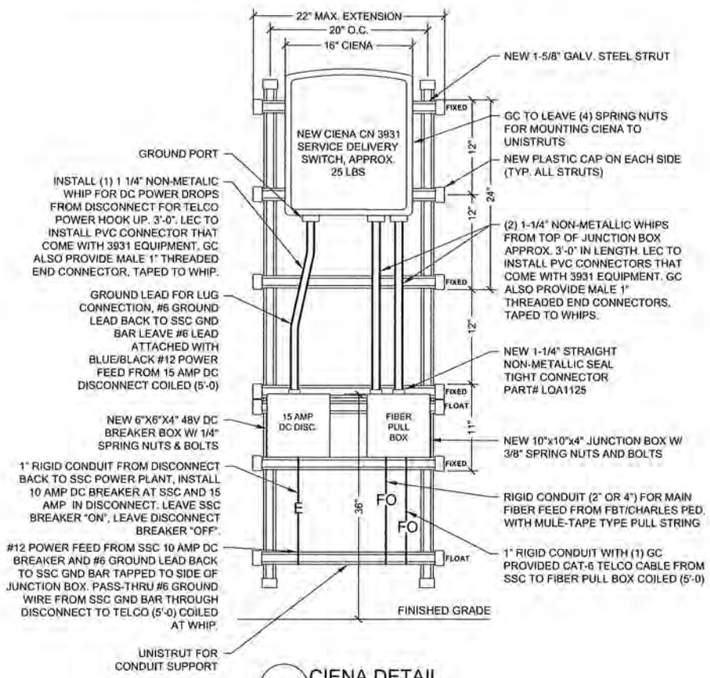

1 CIENA DETAIL
SCALE: N.T.S.

(DOOR REMOVED) PPC

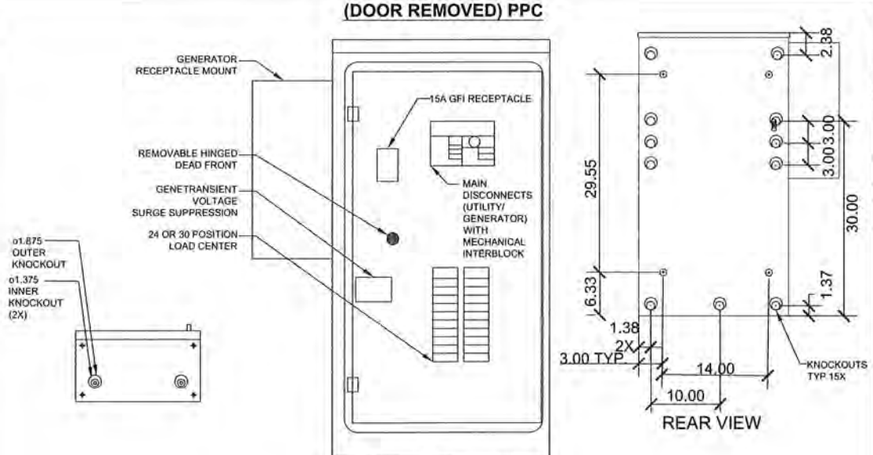

2 PPC DETAILS
SCALE: N.T.S.

ATTENTION GC:
1.) CONTRACTOR TO COORDINATE WITH UTILITY COMPANY FOR CONNECTION OF TEMPORARY AND PERMANENT POWER TO THE SITE IN CASE POWER OUTAGE IS NECESSARY. THE TEMPORARY POWER AND ALL HOOKUP COSTS TO BE PAID BY CONTRACTOR.
2.) CONTRACTOR TO VERIFY LOCAL UTILITY REQUIREMENTS FOR DEPTH, TYPE, SIZE & SEPARATION OF CONDUIT PRIOR TO INSTALLATION . NOTIFY CONSTRUCTION MANAGER IMMEDIATELY OF ANY DISCREPANCIES
3.) CONTRACTOR TO CALL UTILITY LOCATE HOTLINE 48 HRS. PRIOR TO EXCAVATING FOR UNDERGROUND UTILITY LOCATIONS. SURROUNDING EXCAVATED AREA MUST BE PRIVATELY LOCATED FOR NONPUBLIC UTILITIES.
4.) ALL EXTERIOR CONDUITS SHALL BE RGS
5.) ALL INTERIOR CONDUITS SHALL BE EMT
6.) GC TO FIREPROOF ALL PENETRATIONS
7.) GC TO WEATHERPROOF ALL EXTERIOR PENETRATIONS
8.) GC SHALL MAINTAIN A MAXIMUM VOLTAGE DROP OF 3%
9.) GC SHALL COMPLY W/ ALL REQUIREMENTS OF BUILDING CODE, VOLUMES 1& 2, INCLUDING ELECTRICAL CODE.
10.) GC SHALL FURNISH & INSTALL ALL NECESSARY HARDWARE/ JUNCTION BOXES / STRAIN RELIEF EQUIPMENT AS NECESSARY PER BUILDING CODE & INSPECTOR. GC TO PROTECT ALL EXISTING UTILITY CONDUITS, ENCLOSURES & WIRES DURING CONSTRUCTION.

SERVICE EQUIPMENT NOTES:

1. SERVICE EQUIPMENT SHALL HAVE A SHORT CIRCUIT TO WITHSTAND RATING THAT IS EQUAL TO OR EXCEEDS THE MAXIMUM AVAILABLE FAULT CURRENT AT THE SUPPLY TERMINAL. THE INSTALLATION SHALL BE FREE FROM ANY SHORT CIRCUITS AND GROUNDS.
2. ALL ELECTRICAL EQUIPMENT SHALL BE ANCHORED TO WITHSTAND 80 M.P.H. WIND SPEED, EXPOSURE C.
3. ALL ELECTRICAL EQUIPMENT SHALL BE LABELED WITH PERMANENT ENGRAVED PLASTIC LABELS.
4. PATCH, REPAIR AND PAINT ANY AREA THAT HAS BEEN DAMAGED IN THE COURSE OF ELECTRICAL WORK.

CONDUCTOR NOTES:

1. ALL CONDUCTORS SHALL BE COPPER.
2. ALL WIRING SHALL BE COPPER WITH THHN/THWN DUAL RATED 600 VOLTS INSULATION.
3. CONDUCTORS SHALL BE 12 AWG MINIMUM UNLESS SPECIFICALLY NOTED OTHERWISE.
4. GROUNDING CONDUCTORS SHALL BE SOLID TINNED COPPER UNLESS OTHERWISE NOTED.

UTILITY COORDINATION NOTES:

1. PROVIDE POWER AND TELEPHONE TO SERVICE POINTS PER UTILITY COMPANY REQUIREMENTS. CONTRACTOR SHALL CONTACT UTILITY SERVICE PLANNERS AND OBTAIN ALL SERVICE REQUIREMENTS AND INCLUDE COSTS FOR SUCH IN HIS BID.
2. CONTRACTOR TO COORDINATE WITH UTILITY COMPANY FOR CONNECTION OF TEMPORARY AND PERMANENT POWER TO HE SITE. THE TEMPORARY POWER AND ALL HOOKUP COSTS TO BE PAID BY CONTRACTOR.
3. PROVIDE DAILY UPDATES TO PM UNTIL FINAL ELECTRICAL SERVICE IS EFFECTED.

CONDUIT MATERIAL SCHEDULE:

UNLESS NOTED OTHERWISE, ALL CONDUIT RUNS SHALL CONFORM TO THE FOLLOWING :

1.) ALL ABOVE GRADE, EXTERIOR CONDUITS SHALL BE RGS.
2.) ALL BELOW GRADE HORIZONTAL CONDUITS SHALL BE PVC
3.) ALL BELOW GRADE 3" Ø & 45° BENDS SHALL BE STEEL W/THREADED CONNECTIONS.
4.) ALL BELOW GRADE TO ABOVE GRADE RISERS SHALL BE STEEL W/THREADED CONNECTIONS.
5.) SEAL TIGHT FLEXIBLE CONDUIT MAY BE USED WHERE CODE PERMITS.

CONDUIT NOTES:

1. HWGC SHALL BE USED WHEN INSTALLED IN OR UNDER CONCRETE SLABS, IN CONTACT WITH EARTH, OR EXPOSED ABOVE GRADE.
2. EMT SHALL BE USED ONLY FOR INTERIORS RUNS AND SHALL HAVE COMPRESSION TYPE FITTINGS.
3. SEAL TIGHT, FLEXIBLE CONDUIT MAY BE USED WHERE CODE PERMITS. ALL CONDUIT SHALL HAVE FULL SIZE EQUIPMENT GROUND WIRE.
4. PVC SHALL BE SCH 40
5. SERVICE CONDUITS SHALL HAVE NO MORE THAN (3) -90° BENDS IN ANY SINGLE RUN. THE CONTRACTOR SHALL PROVIDE PULL BOXES AS NEEDED WHERE CONDUIT REQUIREMENTS EXCEED THESE CONDITIONS.
6. SERVICE CONDUIT SHALL BE AT A MINIMUM DEPTH OF 42".
7. ALL COAX, POWER AND TELEPHONE SYSTEM CONDUIT SHALL HAVE A MINIMUM 36" RADIUS SWEEPS TO EQUIPMENT, PULL BOXES, MONOPOLE, ETC., UNLESS OTHERWISE NOTED, OR AS REQUIRED BY UTILITY COMPANIES.
8. ELECTRICAL CONDUITS SHALL TRANSITION TO SEALTIGHT AT SSC BASE ENTRY TO PREVENT WIRING CONTACT WITH CONCRETE AND SHARP CABINET EDGES. GC TO CAP & SEAL ALL FUTURE CONDUITS. ALL MATERIALS FURNISHED & INSTALLED BY GC
9. ROUTE RGS SCH. 40 CONDUIT BELOW GRADE FROM THE PPC TO THE TO THE DISCONNECT – ALL CONDUITS BELOW PAVED SURFACED SHALL BE SCH. 80. ALL EXPOSED EXTERIOR CONDUITS SHALL BE RGS SCH. 40 AND INTERIOR CONDUITS (I.E. ROOFTOPS) MAY BE SUBSTITUTED BY EMT.

NOTES:

1. ALL CONDUITS & CONDUCTORS FURNISHED AND INSTALLED BY CONTRACTOR UNLESS NOTED OTHERWISE.
2. SEE SINGLE-LINE DIAGRAM FOR UTILITY CONDUITS & CONDUCTOR SIZES.
3. ALL UTILITY LOCATIONS AND CONNECTIONS TO BE VERIFIED WITH T-MOBILE REPRESENTATIVE.
4. BELLOW GRADE CONDUITS FROM PPC-CABINET TO BE RGS FROM ELBOW TO STUB-UP.

NOTES:

1.) IT SHALL BE THE CONTRACTOR'S RESPONSIBILITY TO COORDINATE WITH THE PROPERTY OWNER & NECESSARY UTILITY COMPANIES FOR THE LOCATION OF ALL EXISTING BELOW GRADE UTILITIES PRIOR TO BEGINNING CONSTRUCTION SHALL BE RESPONSIBLE FOR ANY DAMAGE COSTS ASSOCIATED WITH EXISTING BELOW GRADE UTILITIES.
2.) CONTRACTOR TO COORDINATE WITH UTILITY COMPANY FOR CONNECTION OF TEMPORARY AND PERMANENT POWER TO THE SITE. THE TEMPORARY POWER AND ALL HOOKUP COSTS TO BE PAID BY CONTRACTOR.
3.) CONTRACTOR TO VERIFY LOCAL UTILITY REQUIREMENTS FOR DEPTH, SIZE & SEPARATION OF CONDUIT PRIOR TO INSTALLATION . NOTIFY CONSTRUCTION MANAGER IMMEDIATELY OF ANY DISCREPANCIES
4.) CONTRACTOR TO CALL J.U.L.I.E. (800) 892-0123 48 HRS. PRIOR TO EXCAVATING FOR UNDERGROUND UTILITY LOCATIONS. SURROUNDING EXCAVATED AREA MUST BE PRIVATELY LOCATED FOR NONPUBLIC UTILITIES.

PANEL BOARD SCHEDULE

T-MOBILE PROJECT NAME:		NSD		PANEL STATUS:			NEW			N TO GROUND BOND:		YES			
VOLTAGE:		240V/120		MODEL NUMBER:			T.B.D.			INTERNAL TVSS:		YES			
MAIN BREAKER:		200 AMP		PHASE:			1			WIRE:		3			
MOUNT:		H-FRAME		BUSS RATING:			200 AMPS			AIC:		22,000			
ENCLOSURE TYPE:		NEMA 3R		NEUTRAL BAR:			YES			GROUND BAR:		YES			
CKT	LOAD DESCRIPTION	BREAKER AMPS	BREAKER POLES	BREAKER STATUS	SERVICE LOAD VA	USAGE FACTOR	PHASE A VA	PHASE B VA	USAGE FACTOR	SERVICE LOAD VA	BREAKER STATUS	BREAKER POLES	BREAKER AMPS	LOAD DESCRIPTION	CKT
1	SURGE ARRESTOR	30	2	ON	0	1.00	5250		1.25	4200	ON	2	100	EQUIPMENT RACK	2
3		---	---	ON	0	1.00		5250	1.25	4200	ON	---	100		4
5	---	---	---	N/A	-	0.00	0		0.00	0	N/A	---	---	---	6
7	---	---	---	N/A	0	0.00		0	0.00	0	N/A	---	---	---	8
9	---	---	---	N/A	0	0.00	0		0.00	0	N/A	---	---	---	10
11	---	---	---	N/A	0	0.00		0	0.00	0	N/A	---	---	---	12
13	---	---	---	N/A	0	0.00	0		0.00	0	N/A	---	---	---	14
15	---	---	---	N/A	0	0.00		0	0.00	0	N/A	---	---	---	16
17	---	---	---	N/A	0	0.00	0		0.00	0	N/A	---	---	---	18
19	---	---	---	N/A	0	0.00		0	0.00	0	N/A	---	---	---	20
21	---	---	---	N/A	0	0.00	0		0.00	0	N/A	---	---	---	22
23	---	---	---	N/A	0	0.00		180	1.00	180	ON	1	20	GFI OUTLET	24
							5750	5430	VA			TOTAL KVA	11.18		
												AMPS	46.58		

T-MOBILE
8550 WEST BRYN MAWR AVE.
SUITE 100
CHICAGO, IL 60631
MAIN: (773) 444-5400

CONCORDIA, LTD
A PROFESSIONAL DESIGN FIRM
LICENSE # 3323-011- D.B.A.
CONCORDIA WIRELESS, INC.
361 RANDY ROAD
UNIT 101
CAROL STREAM,IL 60188
MAIN: (847) 981-0801

DRAWN BY: MS	CHECKED BY: GMS
CHECKED BY: RH	APPROVED BY: GMS

WISCONSIN
GHAZWAN M. SADAT
40304
ARLINGTON HEIGHTS ILLINOIS
PROFESSIONAL ENGINEER

ML91205A
RIVER PARK APARTMENTS
1700 E. RIVER PARK COURT
SHOREWOOD, WI 53211

UTILITY DETAILS

E-2A

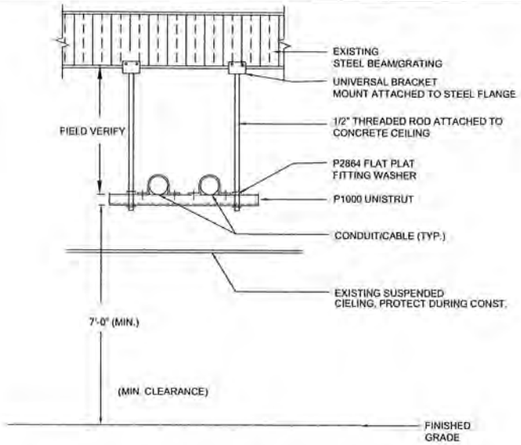

1 TYPICAL OVERHEAD ROUTING OF CONDUIT
SCALE: NTS

SYSTEM NO. C-AJ-1151

F RATING - 2 HR
T RATING - 0 HR
L RATING AT AMBIENT - LESS THAN 1 CFM/SQ FT
L RATING AT 400 F - 4 CFM/SQ FT

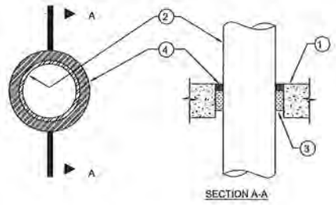

2 TYPICAL U.L. FIRE RATED CONDUIT PENETRATION
SCALE: NTS

GC TO LABEL T-MOBILE FIBER, T-MOBILE POWER, AND T-MOBILE GROUND CONDUITS AT EVERY FLOOR OR WALL TRANSITION/ PENETRATION (IF VISIBLE) AND/OR EVERY ~50FT STRAIGHT RUNS (IF NOT VISIBLE)

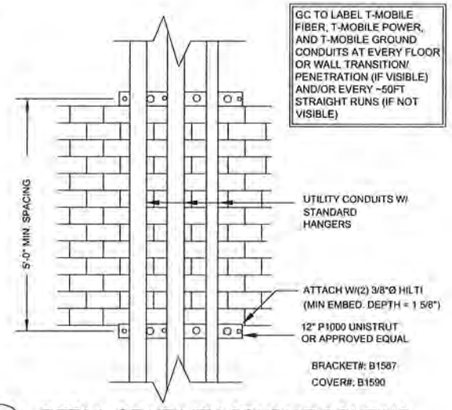

3 DETAIL OF UTILITY CONDUIT ROUTING
SCALE: NTS

VERTICAL UNISTRUT MOUNTING CHART

WALL CONSTRUCTION TYPE	USE
HOLLOW	3/8"ØTOGGLE BOLT
HOLLOW, AT STUD	3/8"Ø LAG SCREW
CONCRETE BLOCK (HOLLOW)	3/8"Ø HILTI HY-20 WITH SCREEN, MINIMUM EMBEDMENT 2-1/2"
CONCRETE (SOLID)	3/8"ØHILTI HY-150 WITH SCREEN, MINIMUM EMBEDMENT 2-1/2"

1. CONDUIT
2. FIMO OR BUTTERFLY CLAMP AS REQUIRED
3. EXISTING WALL ASSEMBLY
4. VERTICAL "UNISTRUT" P1000 'T' SERIES LENGTH BASED ON NUMBER OF CONDUIT TO BE MOUNTED

NOTE:
USE STANDARD STAINLESS STEEL HARDWARE FOR WALL MOUNT AND CONNECTION OF CHANNELS
SPACE UNITS @ 6'-0" ON CENTER

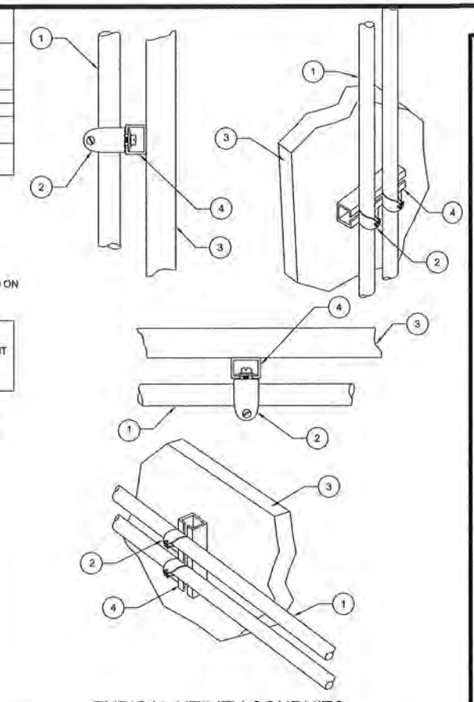

4 TYPICAL UTILITY CONDUITS ROUTING DETAILS
SCALE: N.T.S.

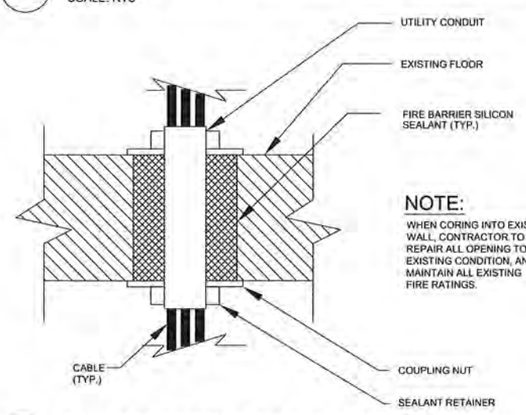

NOTE:
WHEN CORING INTO EXISTING WALL, CONTRACTOR TO REPAIR ALL OPENING TO EXISTING CONDITION, AND MAINTAIN ALL EXISTING FIRE RATINGS.

5 CONDUIT FLOOR PENETRATION DETAIL
SCALE: NTS

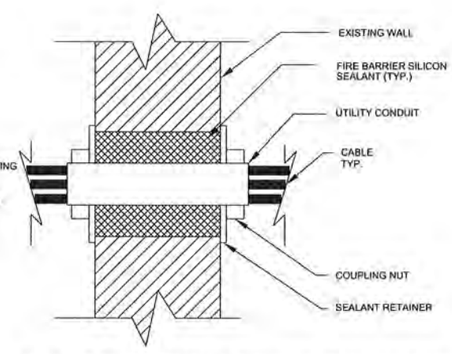

6 CONDUIT WALL PENETRATION DETAIL
SCALE: NTS

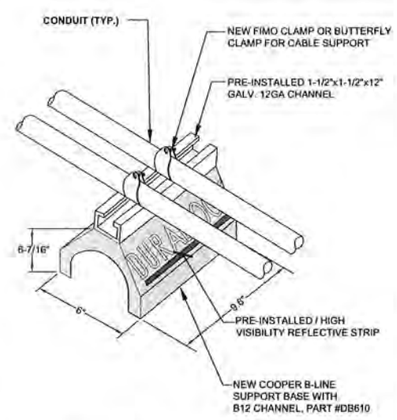

7 CONDUIT ROUTING ON ROOFTOP
SCALE: NTS

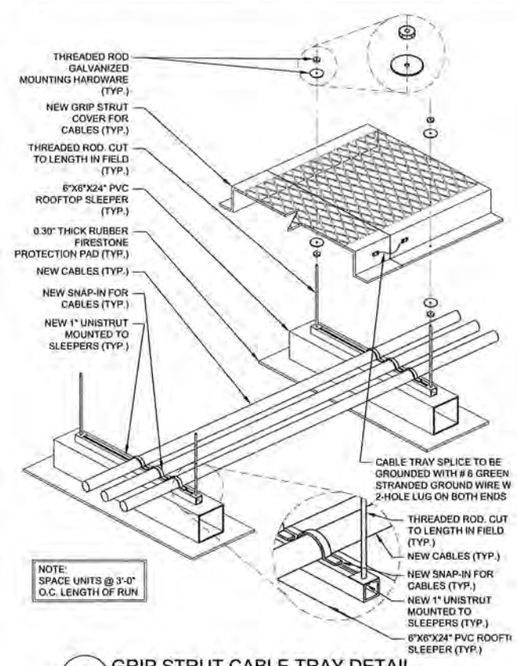

NOTE:
SPACE UNITS @ 3'-0"
O.C. LENGTH OF RUN

8 GRIP STRUT CABLE TRAY DETAIL
SCALE: N.T.S.

T-MOBILE
8550 WEST BRYN MAWR AVE.
SUITE 100
CHICAGO, IL 60631
MAIN: (773) 444-5400

CONCORDIA, LTD
A PROFESSIONAL DESIGN FIRM
LICENSE # 3323-011- D.B.A
CONCORDIA WIRELESS, INC.
361 RANDY ROAD
UNIT 101
CAROL STREAM,IL 60188
MAIN: (847) 981-0801

DRAWN BY: MS	CHECKED BY: GMS
CHECKED BY: RH	APPROVED BY: GMS

WISCONSIN
GHAZWAN M. SADAT
40304
ARLINGTON HEIGHTS, ILLINOIS
PROFESSIONAL ENGINEER

ML91205A
RIVER PARK APARTMENTS
1700 E. RIVER PARK COURT
SHOREWOOD, WI 53211

UTILITY DETAILS

E-3

THROUGH PENETRATION FIRESTOP SYSTEM

UL SYSTEM No. W-J-1005 (F-RATING-2 HR)

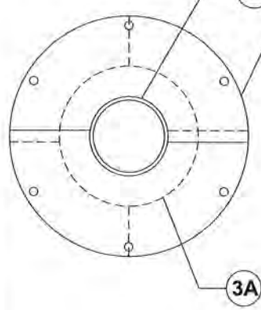

1 WALL PENETRATION
SCALE: N.T.S.

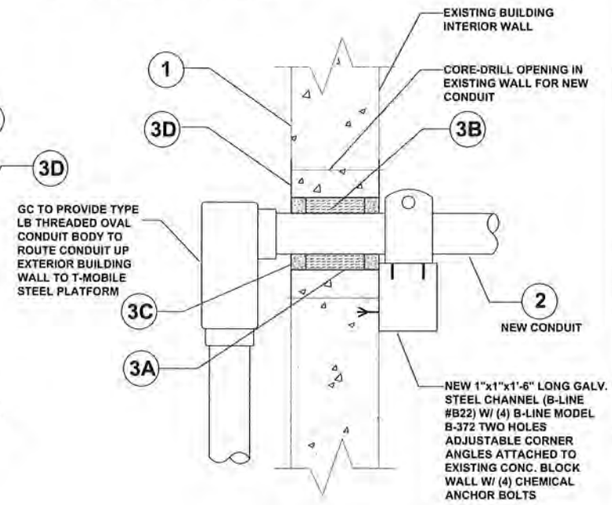

2 SECTION
SCALE: N.T.S.

(1.) **Wall Assembly** — Min 5 in. thick reinforced lightweight or normal weight (100-150) pcf) concrete. Wall may also be constructed of any UL Classified **Concrete Blocks***. Max diam of opening is 6 in. See **Concrete Blocks** (CAZT) category in the Fire Resistance Directory for names of manufacturers.

(2.) **Through Penetrants** — One metallic pipe or conduit to be centered within the firestop system. Pipe or conduit to be rigidly supported on both sides of wall assembly. The following types and sizes of metallic pipe or conduit may be used:

(A.) **Steel Pipe** — Nom 4 in. diam (or smaller) Schedule 5 (or heavier) steel pipe. A nom annular space of 3/4 in. is required within the firestop system.

(B.) **Conduit** — Rigid 4 in. diam (or smaller) electrical metallic tubing or steel conduit. A nom annular space of 3/4 in. is required within the firestop system.

(3.) **Firestop System** — The firestop system shall consist of the following:

(A.) **Metallic Sleeve** — (Optional) — Nom 6 in. diam (or smaller) steel sleeve to retain putty (Item 3C) in position. Sleeve fabricated from 0.016 in. thick galv sheet steel available from putty manufacturer. Length of steel sleeve to be equal to thickness of wall. Sleeve installed by coding the sheet steel to a diam smaller than the through opening, inserting the coil through the opening and releasing the coil to let it uncoil against the circular cutouts in the wall assembly. As an alternate, the steel sleeve may be field fabricated from 0.016 in. thick galv sheet steel in accordance with instruction sheet supplied by putty manufacturer.

(B.) **Packing Material** — Min 3 in. thickness of min 6 pcf mineral wool batt insulation firmly packed into opening as a permanent form. Packing material to be recessed from both surfaces of wall as required to accommodate the required thickness of fill material.

(C.) **Fill, Void or Cavity Material* — Putty** — Min 1 in. thickness of fill material applied within the annulus, on both surfaces of wall. Additional fill material to be installed such that a min 1/8 in. crown is formed around the penetrating item.

EGS NELSON FIRESTOP — Type FSP Putty

(D.) **Trim Ring** — Nom 8 in. diam by 0.016 in. (No. 30 gauge) thick galv sheet steel ring available from putty manufacturer. Ring supplied in two section and positioned together with a min 1/2 in. overlap. Ring secured to surface of wall assembly by six steel wall anchors, equally spaced.

*Bearing the UL Classification Mark

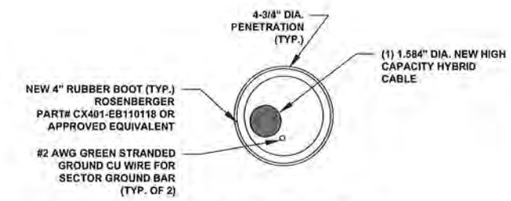

4-3/4" DIA. PENETRATION #1

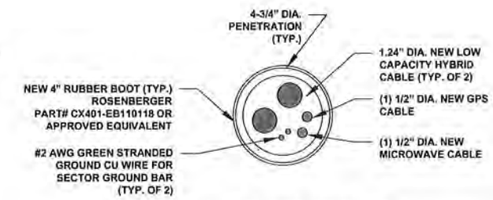

4-3/4" DIA. PENETRATION #2

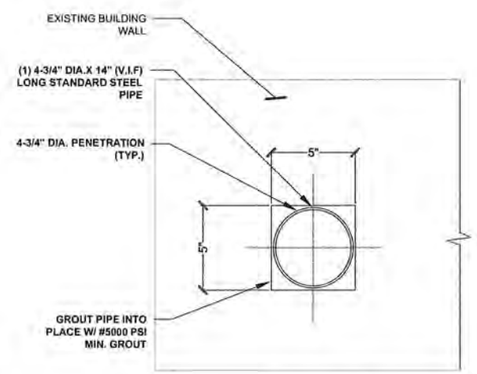

DETAIL A

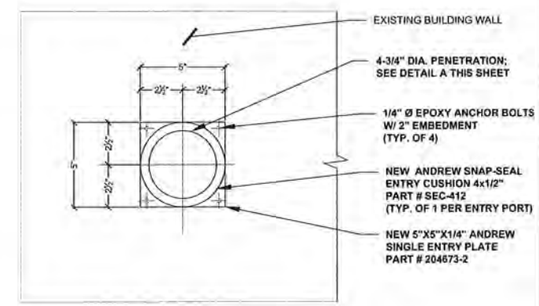

DETAIL B

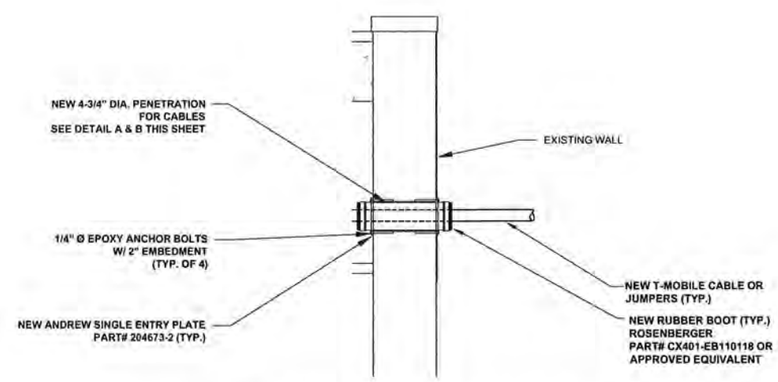

3 NEW HYBRID PENETRATION DETAIL
SCALE: 1/2"=1'-0" (1/2"=2'-0" IF 11 X 17 SHEET SIZE)

NOTE:
GC TO SEAL ALL WALL PENETRATIONS WATERTIGHT

T-Mobile

T-MOBILE
8550 WEST BRYN MAWR AVE.
SUITE 100
CHICAGO, IL 60631
MAIN: (773) 444-5400

CONCORDIA, LTD
A PROFESSIONAL DESIGN FIRM
LICENSE # 3323-011- D.B.A.
CONCORDIA WIRELESS, INC.
361 RANDY ROAD
UNIT 101
CAROL STREAM,IL 60188
MAIN: (847) 981-0801

DRAWN BY: MS	CHECKED BY: GMS
CHECKED BY: RH	APPROVED BY: GMS

WISCONSIN
GHAZWAN M. SADAT
40304
ARLINGTON HEIGHTS, ILLINOIS
PROFESSIONAL ENGINEER

ML91205A
RIVER PARK APARTMENTS
1700 E. RIVER PARK COURT
SHOREWOOD, WI 53211

UTILITY ROUTING DETAILS

E-3A

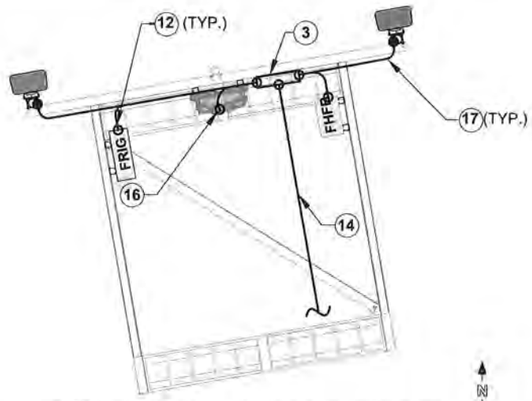

1 TYPICAL SECTOR GROUNDING PLAN
SCALE: 1/2" = 1'-0" (1/2" = 2'-0" IF 11 X 17 SHEET SIZE)

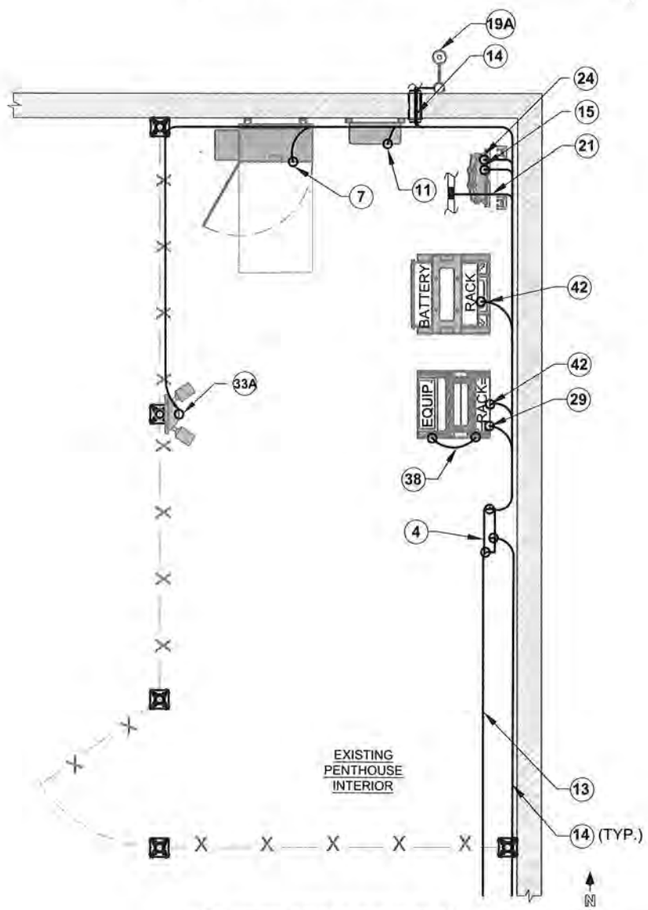

2 SITE GROUNDING PLAN
SCALE: 1/2" = 1'-0" (1/2" = 2'-0" IF 11 X 17 SHEET SIZE)

KEY NOTES:

1. GROUND RING, #2 SOLID, TINNED BARE COPPER WIRE CONSTRUCT RING FROM ONE CONTINUOUS PIECE.
2. 5/8" Ø X 10' COPPER CLAD GROUND ROD
3. SECTOR GROUND BAR (TYP. OF 1 PER SECTOR)
4. MASTER GROUND BAR
4A. LOWER TOWER COPPER GROUND BAR
4B. #2 AWG SOLID, TINNED BARE COPPER GROUND WIRE FROM LOWER TOWER GROUND BAR TO GROUND RING (2 REQUIRED)
5. #2 AWG GREEN STRANDED GROUND CU WIRE BOND DIRECTLY TO TOWER
6. #6 AWG GREEN STRANDED GROUND CU WIRE FROM NEW MICROWAVE DISH TO NEW SECTOR GROUND BAR
7. #6 AWG GREEN STRANDED GROUND CU WIRE FROM PPC TO NEW MASTER GROUND BAR
7A. #2 AWG SOLID, TINNED BARE CU GROUND WIRE FROM PPC TO GROUND RING
8. #6 AWG GREEN STRANDED GROUND CU WIRE FROM FUTURE STEEL CUBE W/MODULES TO NEW MASTER GROUND BAR
8A. #2 AWG SOLID, TINNED BARE CU GROUND WIRE FROM STEEL CUBE W/MODULES TO GROUND RING
9. #2 AWG SOLID, TINNED BARE COPPER GROUND WIRE FROM NEW SSC TO NEW MASTER GROUND BAR
9A. #2 AWG SOLID, TINNED BARE CU GROUND WIRE FROM NEW SSC TO GROUND RING
10. #2 AWG GREEN STRANDED GROUND CU WIRE FROM NEW METER TO NEW MASTER GROUND BAR
11. #6 AWG GREEN STRANDED GROUND CU WIRE FROM NEW CIENA TO NEW MASTER GROUND BAR
11A. #2 AWG SOLID, TINNED BARE CU GROUND WIRE FROM NEW CIENA TO NEW GROUND RING
12. #2 AWG GREEN STRANDED GROUND CU WIRE FROM NEW MODULE PLINTH TO NEW SECTOR GROUND BAR
13. #2 AWG GREEN JACKETED GROUND CU WIRE FROM NEW MASTER GROUND BAR TO EXISTING SITE WATER MAIN
14. #2 AWG GREEN STRANDED GROUND CU WIRE FROM NEW SECTOR GROUND BAR TO NEW MASTER GROUND BAR
14A. #2 AWG SOLID, TINNED BARE CU GROUND WIRE FROM NEW SECTOR GROUND BAR TO NEW SECTOR GROUND BAR
15. #2 AWG GREEN STRANDED GROUND CU WIRE FROM NEW BOTTOM COVP TO NEW MASTER GROUND BAR
15A. #2 AWG SOLID, TINNED BARE CU GROUND WIRE FROM NEW BOTTOM COVP TO GROUND RING
16. #2 AWG GREEN STRANDED GROUND CU WIRE FROM NEW TOP COVP TO NEW SECTOR GROUND BAR
17. #2 AWG SOLID, TINNED BARE COPPER GROUND WIRE FROM NEW ANTENNA PIPE TO NEW SECTOR GROUND BAR
18. #2 AWG SOLID, TINNED BARE COPPER GROUND WIRE FROM METER SOCKET TO ISOLATED GROUND ROD
19. #2 AWG SOLID, TINNED BARE COPPER GROUND WIRE FROM NEW GPS ANTENNA TO GROUND RING
19A. #6 AWG GREEN STRANDED GROUND CU WIRE FROM NEW GPS ANTENNA TO MASTER GROUND BAR
20. EXISTING GROUND RING
21. #6 AWG GREEN STRANDED GROUND CU WIRE FROM HYBRID CABLE & MICROWAVE COAX CABLE TO MASTER GROUND BAR
21A. #2 AWG SOLID, TINNED BARE CU GROUND WIRE FROM HYBRID CABLE TO GROUND RING
22. EXISTING TOWER GROUND RING
23. #6 AWG GREEN STRANDED CU GROUND WIRE FROM NEW CABLE LADDER TO MASTER GROUND BAR
24. #2 AWG GREEN STRANDED COPPER GROUND WIRE FROM NEW ALARM BOX TO MASTER GROUND BAR
24A. #2 AWG SOLID, TINNED BARE COPPER GROUND WIRE FROM NEW ALARM BOX TO GROUND RING
25. #2 AWG GREEN STRANDED COPPER GROUND WIRE FROM ICE BRIDGE TO ICE BRIDGE POST
25A. #2 AWG GREEN STRANDED COPPER GROUND WIRE FROM FROM FENCE TO FENCE POST
26. #2 AWG SOLID, TINNED BARE COPPER GROUND WIRE FROM UTILITY POST TO GROUND RING
27. #2 AWG SOLID, TINNED BARE COPPER GROUND WIRE FROM GROUND RING TO FENCE POST
27A. #2 AWG SOLID, TINNED BARE COPPER GROUND WIRE FROM GROUND RING TO ICE BRIDGE POST
28. #2 AWG SOLID, TINNED BARE CU GROUND WIRE FROM JUNCTION BOX TO GROUND RING
29. #2 AWG GREEN STRANDED CU GROUND WIRE FROM NEW SYSTEM MODULE PLINTH TO NEW MASTER GROUND BAR
30. #2 AWG GREEN STRANDED GROUND CU WIRE FROM UPPER TOWER GROUND BAR TO LOWER TOWER GROUND BAR
30A. #2 AWG GREEN STRANDED GROUND CU WIRE FROM GROUND BAR TO GROUND BAR
31. #2 AWG GREEN STRANDED GROUND CU WIRE FROM NEW SSC TO SSC PLINTH
32. #2 AWG SOLID, TINNED BARE CU GROUND WIRE FROM MASTER GROUND BAR TO GROUND RING
33. #2 AWG SOLID, TINNED BARE COPPER GROUND WIRE FROM NEW LIGHT TO GROUND RING
33A. #2 AWG GREEN STRANDED GROUND CU WIRE FROM NEW NEW LIGHT TO MASTER GROUND BAR
34. #2 AGW SOLID, TINNED BARE COPPER GROUND WIRE FROM STEEL PLATFORM TO GROUND RING
34A. #2 AWG GREEN STRANDED GROUND CU WIRE FROM NEW STEEL PLATFORM TO MASTER GROUND BAR
35. #2 AWG GREEN STRANDED GROUND CU WIRE FROM NEW TMA TO MASTER GROUND BAR
36. GROUND TEST WELL
37. #2 AWG SOLID, TINNED BARE CU GROUND WIRE FROM UNISTRUT TO GROUND RING
37A. #2 AWG GREEN STRANDED GROUND CU WIRE FROM UNISTRUT TO MASTER GROUND BAR
38. #6 AWG GREEN STRANDED CU GROUND WIRE FROM NEW SYSTEM MODULE PLINTH TO NEW SYSTEM MODULE
39. #2 AWG SOLID, TINNED BARE COPPER GROUND WIRE FROM NEW BATTERY CABINET TO NEW MASTER GROUND BAR
39A. #2 AWG GREEN STRANDED GROUND CU WIRE FROM NEW BATTERY CABINET TO BATTERY CABINET PLINTH
40. #2 AGW SOLID, TINNED BARE COPPER GROUND WIRE FROM NEW GROUND RING TO NEW TOWER GROUND RING
41. #2 AWG GREEN STRANDED GROUND CU WIRE FROM NEW MASTER GROUND BAR TO NEW LADDER
42. #2 AWG GREEN STRANDED GROUND CU WIRE FROM NEW MASTER GROUND BAR TO NEW RACK

SYMBOLS LEGEND:

GROUND TEST WELL	
GROUND ROD	
GROUND WIRE (BELOW GRADE)	
GROUND WIRE (ABOVE GRADE) SPARE GROUND WIRE FOR	
FUTURE CONNECTION (10 FT.)	
GROUND BAR	
EXOTHERMIC WELD CONNECTION	
MECHANICAL CONNECTION	
BOND DIRECTLY TO TOWER	

T-Mobile

T-MOBILE
8550 WEST BRYN MAWR AVE.
SUITE 100
CHICAGO, IL 60631
MAIN: (773) 444-5400

CONCORDIA, LTD
A PROFESSIONAL DESIGN FIRM
LICENSE # 3323-011- D.B.A.
CONCORDIA WIRELESS, INC.
361 RANDY ROAD
UNIT 101
CAROL STREAM,IL 60188
MAIN: (847) 981-0801

DRAWN BY: MS	CHECKED BY: GMS
CHECKED BY: RH	APPROVED BY: GMS

WISCONSIN
GHAZWAN M. SADAT
40304
ARLINGTON HEIGHTS ILLINOIS
PROFESSIONAL ENGINEER

ML91205A
RIVER PARK APARTMENTS
1700 E. RIVER PARK COURT
SHOREWOOD, WI 53211

SITE GROUNDING PLAN

EG-1

GROUNDING NOTES

1.) UNDERGROUND AND OVERHEAD UTILITY LENGTHS TO BE DETERMINED FROM SITE PLAN.
2.) SEE ELECTRICAL SPECIFICATIONS SECTION 16000 FOR ALL ELECTRICAL AND GROUNDING INSTALLATION REQUIREMENTS.
3.) FOR ORIENTATION OF SITE LAYOUT SEE SITE PLAN, DRAWING.
4.) UDA CABINET FURNISHED BY OWNER AND INSTALLED BY CONTRACTOR.
5.) GROUND KITS PROVIDED BY OWNER SHALL BE RETROFITTED TO ACCOMMODATE 2 HOLE LUG CONNECTION AND APPROPRIATE LENGTH.
6.) CONTRACTOR RESPONSIBLE TO PROVIDE OWNER CERTIFICATION OF RESISTIVITY TESTING.
7.) GROUND RODS TO BE INSTALLED AT 10' CENTERS.
8.) ALL GROUND LEADS TO BE SLEEVED IN $\frac{3}{4}$"Ø SCHEDULE 40 PVC CONDUIT AND SEALED W/ SILICON.
9.) GROUND BARS SUPPLIED BY OWNER AND INSTALLED BY CONTRACTOR.
10.) ALL BENDS IN GROUNDING SYSTEM MUST BE SMOOTH AND WELL ROUNDED AND MAINTAIN BENDING RADIUS.
11.) SEE SITE PLAN FOR COAXIAL ROUTING THIS SHEET IS INTENDED FOR GROUNDING CLARITY ONLY AND IS SCHEMATIC IN DETAIL.
12.) GROUND KITS SHALL BE INSTALLED BETWEEN 8"-18" OF ALL CONNECTORS.
13.) TOWER FOUNDATION DESIGN BY OWNER, INSTALLED BY CONTRACTOR.
14.) ADDITIONAL GROUND KITS TO BE PLACED AT 100' WHEN ANTENNA CENTERLINE IS 200' OR ABOVE.
15.) ALL CONDUITS TO BE SEALED W/ SILICONE TO PROVIDE A WATER TIGHT SEAL.

KEY NOTES:

1. GROUND RING, #2 SOLID, TINNED BARE COPPER WIRE CONSTRUCT RING FROM ONE CONTINUOUS PIECE.
2. 5/8" Ø X 10' COPPER CLAD GROUND ROD
3. SECTOR GROUND BAR (TYP. OF 1 PER SECTOR)
4. MASTER GROUND BAR
4A. LOWER TOWER COPPER GROUND BAR
4B. #2 AWG SOLID, TINNED BARE COPPER GROUND WIRE FROM LOWER TOWER GROUND BAR TO GROUND RING (2 REQUIRED)
5. #2 AWG GREEN STRANDED GROUND CU WIRE BOND DIRECTLY TO TOWER
6. #6 AWG GREEN STRANDED GROUND CU WIRE FROM NEW MICROWAVE DISH TO NEW SECTOR GROUND BAR
7. #6 AWG GREEN STRANDED GROUND CU WIRE FROM PPC TO NEW MASTER GROUND BAR
7A. #2 AWG SOLID, TINNED BARE CU GROUND WIRE FROM PPC TO GROUND RING
8. #6 AWG GREEN STRANDED GROUND CU WIRE FROM STEEL CUBE W/MODULES TO NEW MASTER GROUND BAR
8A. #2 AWG SOLID, TINNED BARE CU GROUND WIRE FROM STEEL CUBE W/MODULES TO GROUND RING
9. #2 AWG SOLID, TINNED BARE COPPER GROUND WIRE FROM NEW SSC TO NEW MASTER GROUND BAR
9A. #2 AWG SOLID, TINNED BARE CU GROUND WIRE FROM NEW SSC TO GROUND RING
10. #2 AWG GREEN STRANDED GROUND CU WIRE FROM NEW METER TO EXISTING SITE WATER MAIN
11. #6 AWG GREEN STRANDED GROUND CU WIRE FROM NEW CIENA TO NEW MASTER GROUND BAR
11A. #2 AWG SOLID, TINNED BARE CU GROUND WIRE FROM NEW CIENA TO NEW GROUND RING
12. #2 AWG GREEN STRANDED GROUND CU WIRE FROM NEW MODULE PLINTH TO NEW SECTOR GROUND BAR
13. #2 AWG GREEN JACKETED GROUND CU WIRE FROM NEW MASTER GROUND BAR TO EXISTING SITE WATER MAIN
14. #2 AWG GREEN STRANDED GROUND CU WIRE FROM NEW SECTOR GROUND BAR TO NEW MASTER GROUND BAR
14A. #2 AWG SOLID, TINNED BARE CU GROUND WIRE FROM NEW SECTOR GROUND BAR TO NEW SECTOR GROUND BAR
15. #2 AWG GREEN STRANDED GROUND CU WIRE FROM NEW BOTTOM COVP TO NEW MASTER GROUND BAR
15A. #2 AWG SOLID, TINNED BARE CU GROUND WIRE FROM NEW BOTTOM COVP TO GROUND RING
16. #2 AWG GREEN STRANDED GROUND CU WIRE FROM NEW TOP COVP TO NEW SECTOR GROUND BAR
17. #2 AWG SOLID, TINNED BARE COPPER GROUND WIRE FROM NEW ANTENNA PIPE TO NEW SECTOR GROUND BAR
18. #2 AWG SOLID, TINNED BARE COPPER GROUND WIRE FROM METER SOCKET TO ISOLATED GROUND ROD
19. #2 AWG SOLID, TINNED BARE COPPER GROUND WIRE FROM NEW GPS ANTENNA TO GROUND RING
19A. #6 AWG GREEN STRANDED GROUND CU WIRE FROM NEW GPS ANTENNA TO MASTER GROUND BAR
20. EXISTING GROUND RING
21. #6 AWG GREEN STRANDED GROUND CU WIRE FROM HYBRID CABLE & MICROWAVE COAX CABLE TO MASTER GROUND BAR
21A. #2 AWG SOLID, TINNED BARE CU GROUND WIRE FROM HYBRID CABLE TO GROUND RING
22. EXISTING TOWER GROUND RING
23. #6 AWG GREEN STRANDED CU GROUND WIRE FROM NEW CABLE LADDER TO MASTER GROUND BAR
24. #2 AWG GREEN STRANDED COPPER GROUND WIRE FROM NEW ALARM BOX TO MASTER GROUND BAR
24A. #2 AWG SOLID, TINNED BARE COPPER GROUND WIRE FROM NEW ALARM BOX TO GROUND RING
25. #2 AWG GREEN STRANDED COPPER GROUND WIRE FROM ICE BRIDGE TO ICE BRIDGE POST
25A. #2 AWG GREEN STRANDED COPPER GROUND WIRE FROM FROM FENCE TO FENCE POST
26. #2 AWG SOLID, TINNED BARE COPPER GROUND WIRE FROM UTILITY POST TO GROUND RING
27. #2 AWG SOLID, TINNED BARE COPPER GROUND WIRE FROM GROUND RING TO FENCE POST
27A. #2 AWG SOLID, TINNED BARE COPPER GROUND WIRE FROM GROUND RING TO ICE BRIDGE POST
28. #2 AWG SOLID, TINNED BARE CU GROUND WIRE FROM JUNCTION BOX TO GROUND RING
28A. #2 AWG GREEN STRANDED CU GROUND WIRE FROM JUNCTION BOX TO NEW MASTER GROUND BAR
29. #2 AWG GREEN STRANDED CU GROUND WIRE FROM SYSTEM MODULE PLINTH TO NEW MASTER GROUND BAR
30. #2 AWG GREEN STRANDED GROUND CU WIRE FROM UPPER TOWER GROUND BAR TO LOWER TOWER GROUND BAR
30A. #2 AWG GREEN STRANDED GROUND CU WIRE FROM GROUND BAR TO GROUND BAR
31. #2 AWG GREEN STRANDED GROUND CU WIRE FROM NEW SSC TO SSC PLINTH
32. #2 AWG SOLID, TINNED BARE CU GROUND WIRE FROM MASTER GROUND BAR TO GROUND RING
33. #2 AWG SOLID, TINNED BARE COPPER GROUND WIRE FROM NEW LIGHT TO GROUND RING
33A. #2 AWG GREEN STRANDED GROUND CU WIRE FROM NEW NEW LIGHT TO MASTER GROUND BAR
34. #2 AGW SOLID, TINNED BARE COPPER GROUND WIRE FROM STEEL PLATFORM TO GROUND RING
34A. #2 AWG GREEN STRANDED GROUND CU WIRE FROM NEW STEEL PLATFORM TO MASTER GROUND BAR
35. #2 AWG GREEN STRANDED GROUND CU WIRE FROM NEW TMA TO MASTER GROUND BAR
36. GROUND TEST WELL
37. #2 AWG SOLID, TINNED BARE CU GROUND WIRE FROM UNISTRUT TO GROUND RING
37A. #2 AWG GREEN STRANDED GROUND CU WIRE FROM UNISTRUT TO MASTER GROUND BAR
38. #6 AWG GREEN STRANDED CU GROUND WIRE FROM NEW SYSTEM MODULE PLINTH TO NEW SYSTEM MODULE
39. #2 AWG SOLID, TINNED BARE COPPER GROUND WIRE FROM NEW BATTERY CABINET TO NEW MASTER GROUND BAR
39A. #2 AWG GREEN STRANDED GROUND CU WIRE FROM NEW BATTERY CABINET TO BATTERY CABINET PLINTH
40. #2 AGW SOLID, TINNED BARE COPPER GROUND WIRE FROM NEW GROUND RING TO NEW TOWER GROUND RING
41. #2 AWG GREEN STRANDED GROUND CU WIRE FROM NEW MASTER GROUND BAR TO NEW LADDER
42. #2 AWG GREEN STRANDED GROUND CU WIRE FROM NEW MASTER GROUND BAR TO NEW RACK

INSTALLATION NOTES:

1. SELECT BOLT LENGTH TO PROVIDE A MINIMUM OF TWO EXPOSED THREADS.
2. BURNISH MOUNTING SURFACE TO REMOVE PAINT IN THE AREA OF LUG CONTACT AND REMOVE OXIDATION FROM OUTDOOR WEATHERED BARS.
3. APPLY ANTI-OXIDANT COMPOUND TO MATING SURFACE OF LUG AND WIPE CLEAN EXCESS COMPOUND.
4. USE SOLID COPPER WIRE AND MECHANICAL 2-HOLE LUG FOR ALL EXTERIOR GROUNDING.

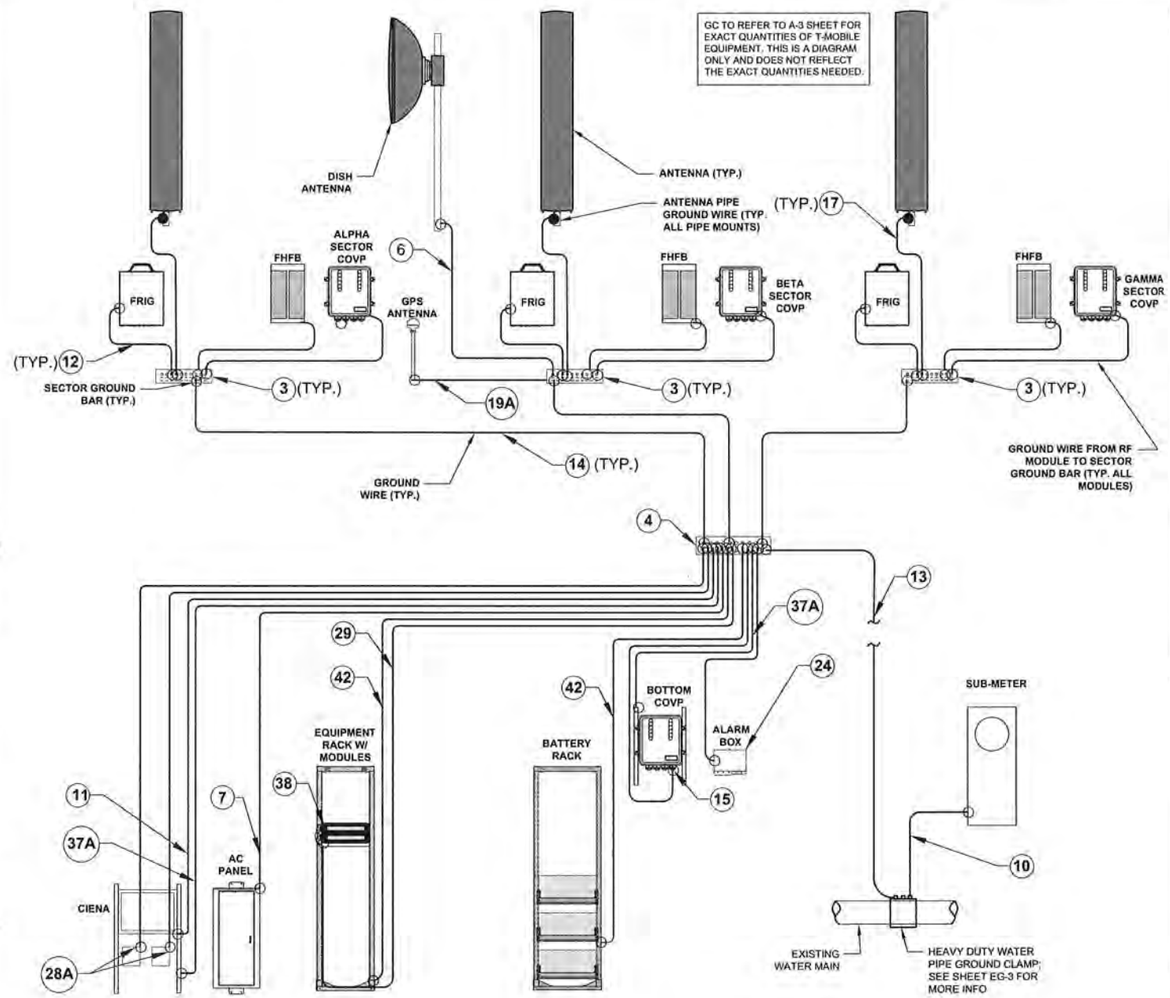

1 TYPICAL GROUNDING DIAGRAM
SCALE: N.T.S.

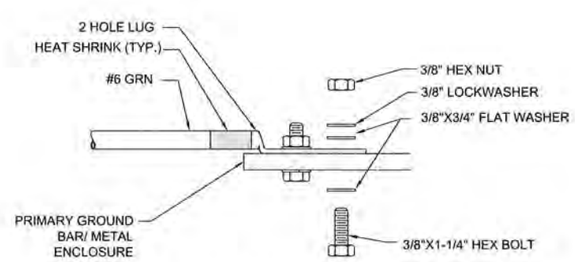

2 MECHANICAL GROUND CONNECTION
SCALE: N.T.S.

SYMBOLS LEGEND:

GROUND TEST WELL	
GROUND ROD	
GROUND WIRE (BELOW GRADE)	
GROUND WIRE (ABOVE GRADE) SPARE GROUND WIRE FOR	
FUTURE CONNECTION (10 FT.)	
GROUND BAR	
EXOTHERMIC WELD CONNECTION	
MECHANICAL CONNECTION	
BOND DIRECTLY TO TOWER	

T-Mobile

T-MOBILE
8550 WEST BRYN MAWR AVE.
SUITE 100
CHICAGO, IL 60631
MAIN: (773) 444-5400

CONCORDIA, LTD
A PROFESSIONAL DESIGN FIRM
LICENSE # 3323-011- D.B.A.
CONCORDIA WIRELESS, INC.
361 RANDY ROAD
UNIT 101
CAROL STREAM,IL 60188
MAIN: (847) 981-0801

DRAWN BY: MS	CHECKED BY: GMS
CHECKED BY: RH	APPROVED BY: GMS

WISCONSIN
GHAZWAN M. SADAT
40304
ARLINGTON HEIGHTS, ILLINOIS
PROFESSIONAL ENGINEER

ML91205A
RIVER PARK APARTMENTS
1700 E. RIVER PARK COURT
SHOREWOOD, WI 53211

GROUNDING RISER DIAGRAM

EG-1A

CADWELD CONNECTIONS OR APPROVED EQUAL		BURNDY CONNECTIONS OR APPROVED EQUAL
 PARALLEL HORIZONTAL CONDUCTORS PARALLEL THROUGH CONNECTION OF HORIZONTAL CABLES TYPE PT	 HORIZONTAL STEEL SURFACE TO FLAT STEEL SURFACE OR HORIZONTAL PIPE TYPE HS	 "C" CONNECTOR HYPRESS TYPE YGHC
 THROUGH CABLE TO GROUND ROD THROUGH CABLE TO TOP OF GROUND ROD TYPE GT	 VERTICAL STEEL SURFACE CABLE DOWN AT 45° TO VERTICAL STEEL SURFACE INCLUDING PIPE TYPE VS	 BOND JUMPER FIELD FABRICATED GREEN STRANDED INSULATED TYPE 2-YA-2
 HORIZONTAL SPLICE SPLICE OF HORIZONTAL CABLES	 VERTICAL PIPE CABLE DOWN AT 45° TO RANGE OF VERTICAL PIPES TYPE VS	 COPPER LUGS TWO HOLE - LONG BARREL LENGTH TYPE YA-2

1 CADWELD DETAILS
SCALE: NTS

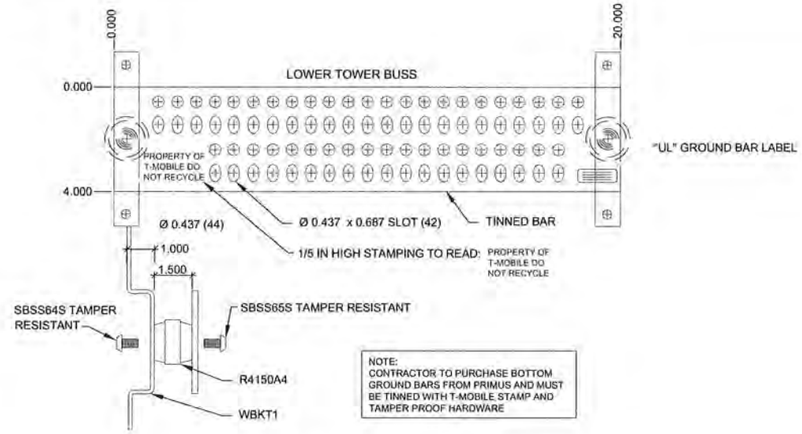

2 GROUND BAR ASSEMBLY
SCALE: NTS

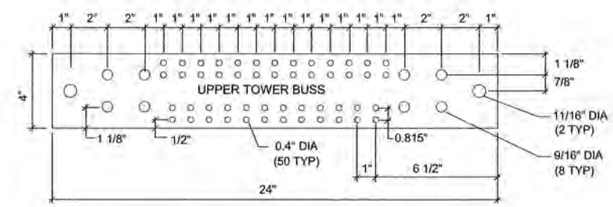

3 GROUND BAR DETAIL
SCALE: NTS

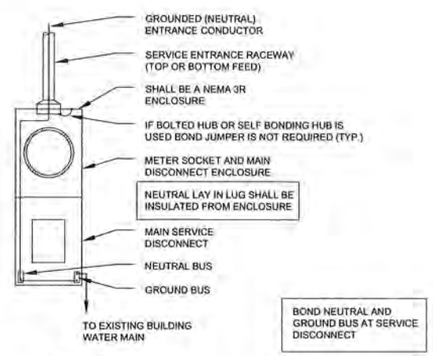

NOTE TO GC:

GC SHALL NOT ORDER LONG PEDESTAL BASE METER

4 SERVICE ENTRANCE GROUNDING
SCALE: NTS

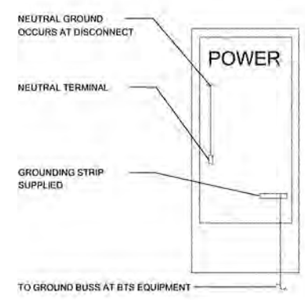

POWER DISTRIBUTION CENTER NOTES

1. CONTRACTOR SHALL LABEL CIRCUIT BREAKERS W/ PERMANENT ENGRAVED PLASTIC LABELS NOTING FUNCTION OF BREAKER.
2. CONTRACTOR SHALL REPLACE MISSING COMPARTMENT ACCESS COVER SCREWS LOST DURING INSTALLATION.
3. CONTRACTOR SHALL ENSURE ENCLOSURE IS RODENT-PROOF AFTER INSTALLATION OF CABINET & CONDUITS.

5 POWER DISTRIBUTION PANEL GROUNDING
SCALE: NTS

T-Mobile

T-MOBILE
8550 WEST BRYN MAWR AVE.
SUITE 100
CHICAGO, IL 60631
MAIN: (773) 444-5400

CONCORDIA, LTD
A PROFESSIONAL DESIGN FIRM
LICENSE # 3323-011- D.B.A.
CONCORDIA WIRELESS, INC.
361 RANDY ROAD
UNIT 101
CAROL STREAM,IL 60188
MAIN: (847) 981-0801

DRAWN BY: MS	CHECKED BY: GMS
CHECKED BY: RH	APPROVED BY: GMS

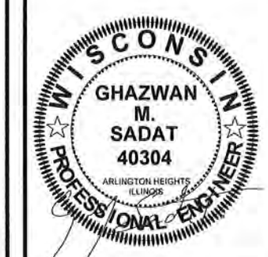

ML91205A
RIVER PARK APARTMENTS
1700 E. RIVER PARK COURT
SHOREWOOD, WI 53211

GROUNDING DETAILS

EG-2

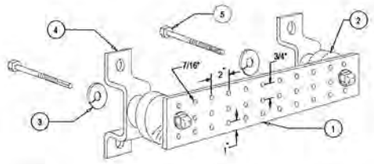

LEGEND

1- GROUND BUSS BAR: 1/4"X 4"X 24". CONFIRM w/T-MOBILE PROJECT MANAGER THE APPROVED BUSS MFR. HOLE CENTERS TO MATCH NEMA DOUBLE LUG CONFIGURATION
2- INSULATORS, CONFIRM THE APPROVED BUSS MFR. w/T-MOBILE
3- 5/8" LOCKWASHERS, CONFIRM w/T-MOBILE THE APPROVED BUSS MFR. (NEWTON INSTRUMENT CO. CAT NO. 3015-8 OR EQUIVALENT)
4- WALL MOUNTING BRACKET, NEWTON INSTRUMENT CO. CAT NO. A-6056 OR APPROVED EQUIVALENT (CONFIRM w/T-MOBILE THE APPROVED BUSS MFR.)
5- 5/8-11 X 1" H.H.C.S. BOLTS, NEWTON INSTRUMENT CO. CAT NO. 3012-1 OR APPROVED EQUIVALENT (CONFIRM w/T-MOBILE THE APPROVED BUSS MFR.)

ALTERNATE EQUALS-COMSCOPE, 1/4"X 4"X 14" BUS BAR W/INSULATED HARDWARE-#GB0414IT (CONFIRM w/T-MOBILE THE APPROVED BUSS MFR.)

1 GROUNDING - STANDARD GROUND BAR DETAIL
SCALE: NTS

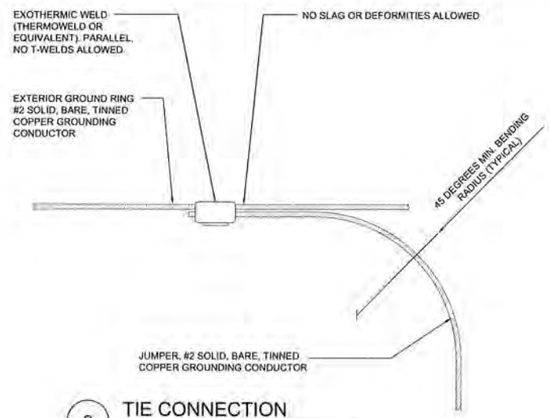

2 TIE CONNECTION
SCALE: NTS

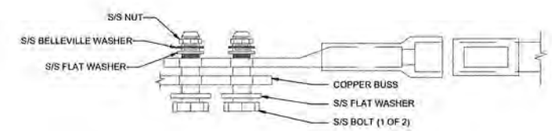

NOTES:
1. ALL HARDWARE 18-8 STAINLESS STEEL INCLUDING BELLEVILLES. COAT ALL SURFACES WITH KOPR-SHIELD BEFORE MATING.
2. FOR GROUND BOND TO STEEL ONLY: INSERT A DRAGON TOOTH WASHER BETWEEN LUG AND STEEL. COAT ALL SURFACES WITH KOPR-SHEILD.

3 STANDARD LUG CONNECTION OF GROUND LEADS TO GROUND BAR DETAIL
SCALE: NTS

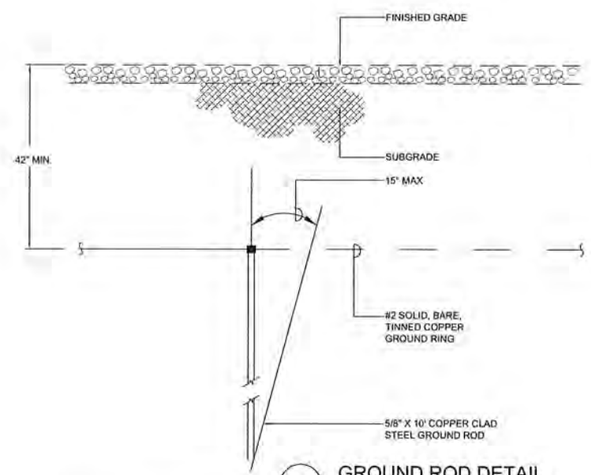

4 GROUND ROD DETAIL
SCALE: NTS

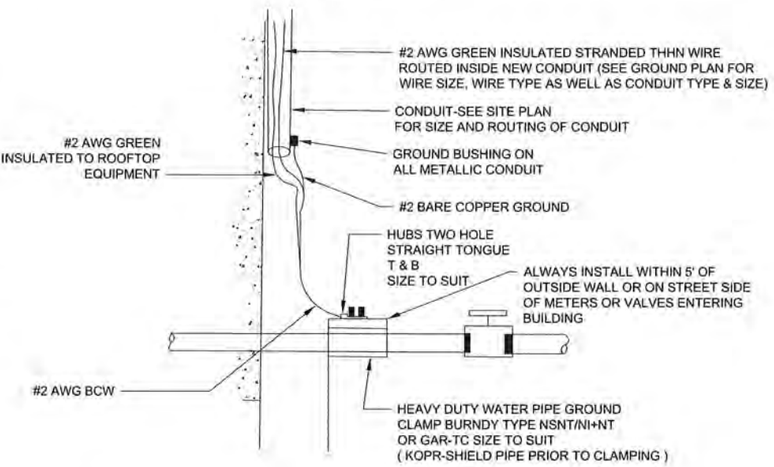

5 CONNECTION TO WATERMAIN & BUILDING STEEL
SCALE: NTS

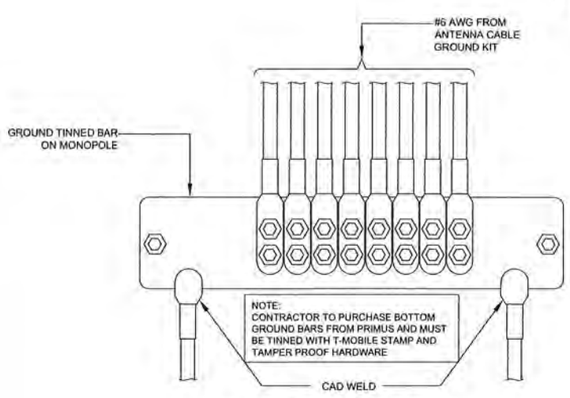

6 GROUND BAR DETAIL
SCALE: NTS

T-Mobile

T-MOBILE
8550 WEST BRYN MAWR AVE.
SUITE 100
CHICAGO, IL 60631
MAIN: (773) 444-5400

CONCORDIA, LTD
A PROFESSIONAL DESIGN FIRM
LICENSE # 3323-011- D.B.A.
CONCORDIA WIRELESS, INC.
361 RANDY ROAD
UNIT 101
CAROL STREAM,IL 60188
MAIN: (847) 981-0801

DRAWN BY: MS	CHECKED BY: GMS
CHECKED BY: RH	APPROVED BY: GMS

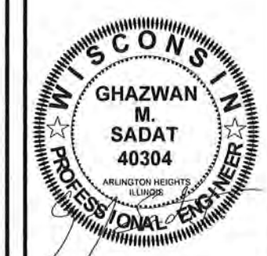

ML91205A
RIVER PARK APARTMENTS
1700 E. RIVER PARK COURT
SHOREWOOD, WI 53211

GROUNDING DETAILS

EG-3

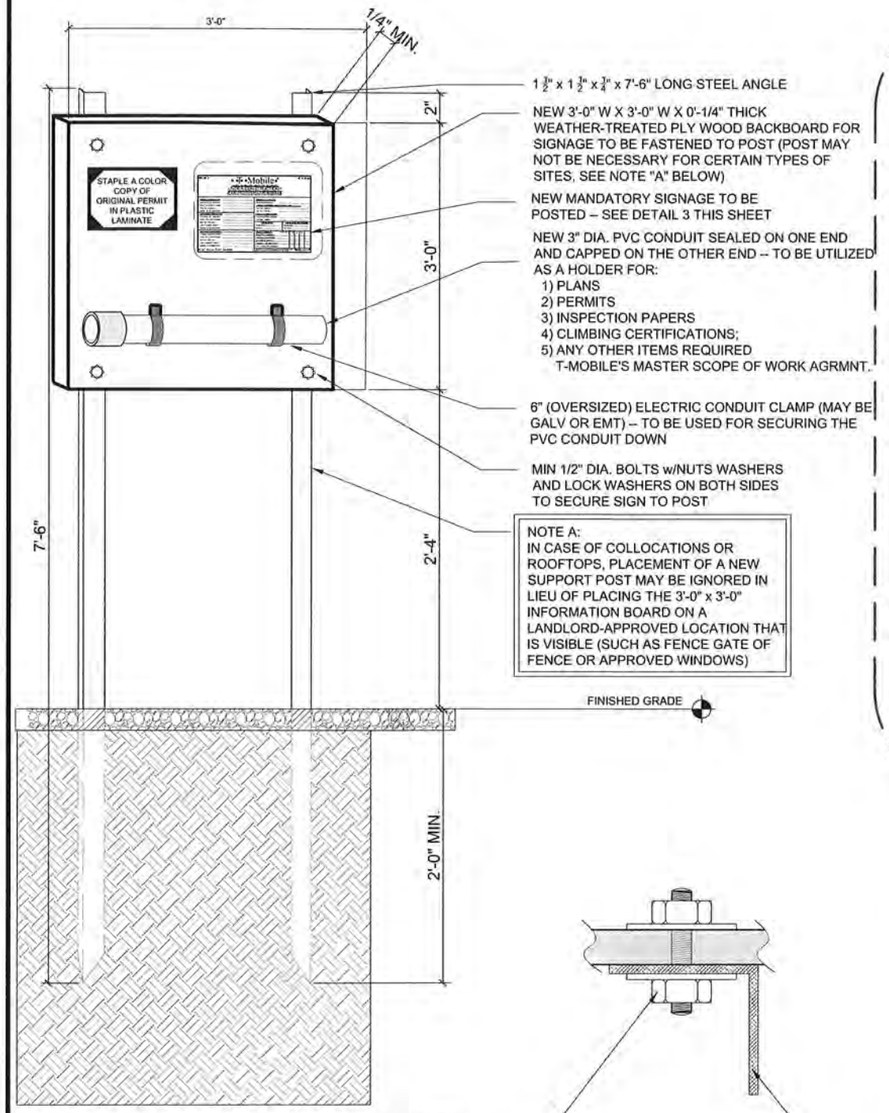

1 SITE INFORMATION POST & BOARD (ELEVATION VIEW)
SCALE: N.T.S.

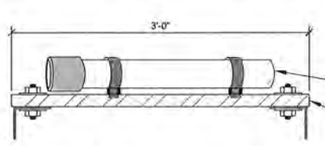

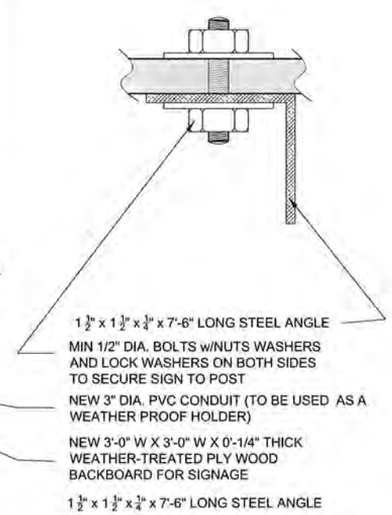

2 SITE INFORMATION POST & BOARD (PLAN VIEW)
SCALE: N.T.S.

T·M·O· ·U·S·A·

·T· · ·Mobile·®

THIS IS A T-MOBILE USA FACILITY THAT IS CURRENTLY

UNDER CONSTRUCTION!!!

THE FOLLOWING INFORMATION IS SHALL BE POSTED BY THE GENERAL CONTRACTING FIRM THAT HAS BEEN AWARDED THE CONSTRUCTION OF THIS SITE FAILURE TO POST THIS INFORMATION CONSTITUTES A VIOLATION OF THE MASTER SCOPE OF WORK AGREEMENT BETWEEN THE CONTRACTOR & T-MOBILE

SITE NUMBER: **SITE NAME**

GENERAL CONTRACTOR:
CONTRACTOR LICENSE #
POINT OF CONTACT NAME
CONTACT PHONE #
NAMES OF ON-SITE STAFF

ELECTRICAL CONTRACTOR:
CONTRACTOR LICENSE #
POINT OF CONTACT NAME
CONTACT PHONE #
CREW LEADER PHONE #

ANTENNA & LINE CREW CO:
CLIMBING CERTIFICATION#
POINT OF CONTACT NAME
CONTACT PHONE #
CREW LEADER PHONE #
NAMES OF ON-SITE STAFF

EMERGENCY CONTACTS FIRE
POLICE/FIRE PHONE # POLICE
BOU

T-MOBILE CONSTRUCTION
CONSTRUCTION MANAGER
CONTACT PHONE #
PROJECT MANAGER
CONTACT PHONE #
T-MOBILE NETWORK OPERATIONS (1 - 800 - -)

LOCAL TELCO	LOCAL ELECTRIC COMPANY
ENGINEER:	ENGINEER:
PHONE #	PHONE #

ON-SITE CHECKLIST AVAILABLE:	YES	NO	N/A	DATE
PERMITTED DRAWINGS				
CONSTRUCTION PERMIT				
ELECTRICAL PERMIT				
CLIMBING CERTIFICATIONS				
CITY INSPECTION STICKERS				

·Get more from life····

!IMPORTANT!!: GC Shall Post this Mandatory Sign on the SITE INFORMATION BOARD along with the materials from the above noted checklist in a Visible Area On-Site

·T· · ·Mobile·®

3 ON-SITE MANDATORY INFORMATION SIGN / BOARD
SCALE: N.T.S.

!ATTENTION GC!
THIS IS A TEMPORARY INSTALLATION THAT MAY REQUIRE USE OF A HOLE AUGER -- AT NO CIRCUMSTANCE WHATSOEVER WILL THE GC BE ALLOWED TO POUR/PLACE CONCRETE AROUND THE POST -- THIS IS A TEMPORARY INSTALLATION AND WILL BE REMOVED AT THE END OF THE PROJECT LIFE AT THE CONCLUSION OF THE QA WALK

!ATTENTION GC!
1- APPROVE LOCATION OF SIGN WITH T-MOBILE PROJECT MANAGER AND LANDLORD REP. SIGN SHALL NOT BE POSE A TRIPPING HAZARD. GC SHALL BE RESPONSIBLE FOR PLACEMENT AND MAINTENANCE OF THE SIGN BOARD UNTIL THE CONCLUSION OF THE QA WALK

2- MATERIAL SAFETY DATA SHEETS FOR ALL MATERIALS THAT ARE FURNISHED BY GC SHALL BE PLACED ON SITE.

OSHA CFR 1910 SPECIFIES THAT IF YOU HAVE EMPLOYEES OR CONTRACTORS WHO CLIMB HIGHER THAN SIX FEET THEY MUST BE TRAINED AND CERTIFIED IN FALL PROTECTION. IF THEY ARE NOT CERTIFIED, THEY MUST BE UNDER DIRECT ON-SITE SUPERVISION OF A CERTIFIED INDIVIDUAL, AND CLIMB 100% ATTACHED. IT IS THE CONTRACTOR'S RESPONSIBILITY TO CONSULT WITH ALL APPLICABLE OSHA RULES AND GUIDELINES PRIOR TO CONSTRUCTION START

UTILITY NOTES:

1.) CONTRACTOR TO VERIFY LOCAL UTILITY REQUIREMENTS FOR DEPTH, SIZE & SEPARATION OF CONDUITS PRIOR TO INSTALLATION. NOTIFY CONSTRUCTION MANAGER IMMEDIATELY OF ANY DISCREPANCIES.

2.) CONTRACTOR TO CALL UTILITY LOCATES 48 HRS PRIOR TO EXCAVATING FOR UNDERGROUND UTILITY LOCATIONS. LOCATION SURROUNDING EXCAVATED AREA MUST BE PRIVATELY LOCATED FOR NON-PUBLIC UTILITIES.

4 ADDITIONAL NOTES AND GUIDELINES
SCALE: N.T.S.

·T· · ·Mobile·

T-MOBILE
8550 WEST BRYN MAWR AVE.
SUITE 100
CHICAGO, IL 60631
MAIN: (773) 444-5400

CONCORDIA, LTD
A PROFESSIONAL DESIGN FIRM
LICENSE # 3323-011- D.B.A.
CONCORDIA WIRELESS, INC.
361 RANDY ROAD
UNIT 101
CAROL STREAM,IL 60188
MAIN: (847) 981-0801

DRAWN BY: MS	CHECKED BY: GMS
CHECKED BY: RH	APPROVED BY: GMS

WISCONSIN
GHAZWAN M. SADAT
40304
ARLINGTON HEIGHTS ILLINOIS
PROFESSIONAL ENGINEER

ML91205A
RIVER PARK APARTMENTS
1700 E. RIVER PARK COURT
SHOREWOOD, WI 53211

MANDATORY SIGNAGE & POSTING

MISC-1

Report to Plan Commission **November 22, 2016**

Prepared by: Planning Director Ericka Lang

RE: 1700 E. River Park Court Zoning Amendment to P-3 Parks Preservations

Background

The Village of Shorewood River Park is located at 3501 N. Oakland Avenue, bounded by Oakland Avenue, Edgewood Avenue, the Oak Leaf regional bike trail and several commercial buildings along the north boundary.

In 1972 3.2 acres comprising the southwestern area containing the baseball diamond and the north east parking lot, just south of Harry's, were acquired with federal Land and Water Conservation Act Funds. In exchange for the federal money, a restrictive covenant was placed on the land for use only for park purposes and as an open space site. During that time the Village discussed the potential of not being able to develop the parcel and decided to take the federal money with the restrictions. Per the committee meeting notes, the grant restrictions only allow 10% of the area to be occupied by a structure. It appears from the 1992 Village Park Plan that the two east parking lots in River Park were built to support the anticipated needs of the users of the Park and met the covenant restrictions. The Certified Survey Map is attached **(Exhibit A)** that shows the land that has the restrictive covenant.

In 2006 a Central District Master Plan was adopted and the zoning code and map thereafter amended. With that amendment, the two parking lots along Oakland Avenue in River Park were changed to B-1 Business District. During public meetings and hearings for the Central District Master Plan update in 2014, the community opposed development along Oakland Avenue where the two parking lots are.

Analysis

The current zoning map **(Exhibit B)** shows the existing zoning in River Park. There are three zoning districts there:

1. B-1 Commercial Use District allows 100% commercial use buildings or mixed-use.
2. P-3 Parks Preservation is to preserve the zone for scenic, scientific, historic and recreational uses and encourage the preservation of undeveloped areas.
3. Planned Development District (PDD) is a district that adopts the proposed projects zoning based on what is proposed. For example, if the building is set back 18 feet from the front border, then the front set back will be 18 feet.

The B-1 zoning of these parcels is within half of a parcel as shown in the enclosed parcel map **(Exhibit C).** The other half is zoned P-3 Park Preservation.

.

Staff Recommendation

Staff recommends zoning amendments for the two front B-1 parcels to P-3 Parks Preservation District. The zoning descriptions for these districts is attached (**Exhibit D**).

Per Zoning Chapter 535, Article 4 Changes and Amendments, Village-initiated zoning amendments go to the Plan Commission for review and recommendation to the Village Board who holds a public hearing. The zoning map and zoning code is amended and approved at that time.

EXHIBIT A

CERTIFIED SURVEY MAP NO. # 2314

BEING A PART OF GOVERNMENT LOT 2 IN THE N E 1/4 OF SECTION 9, T 7 N, R 22 E IN THE VILLAGE OF SHOREWOOD, MILWAUKEE COUNTY, WISCONSIN.

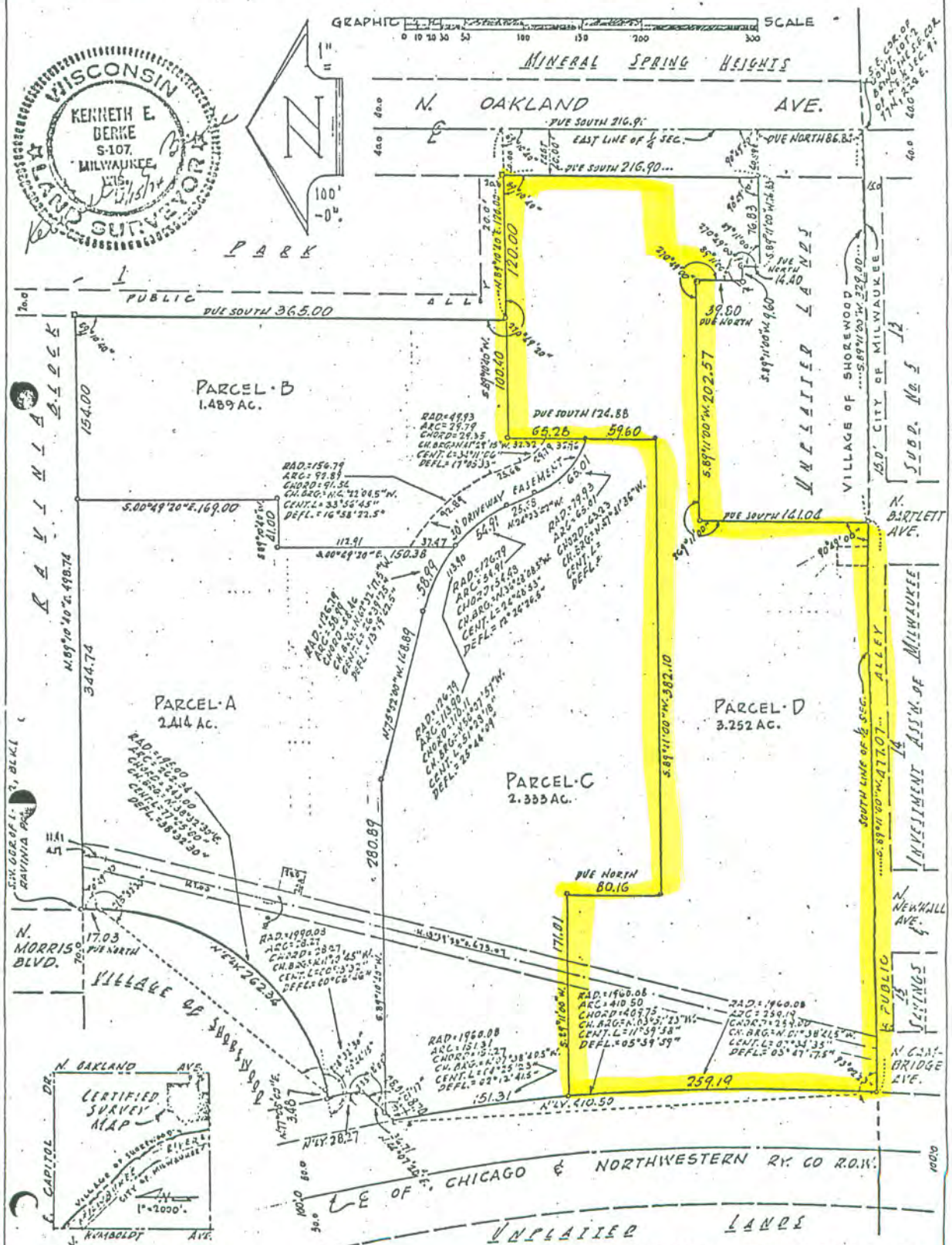

NATIONAL SURVEY SERVICE, INC.
CIVIL ENGINEERS AND SURVEYORS
3470 N. 127TH ST. (414) 781-1000
BROOKFIELD, WISCONSIN 53005

EXHIBIT B

Zoning River Park

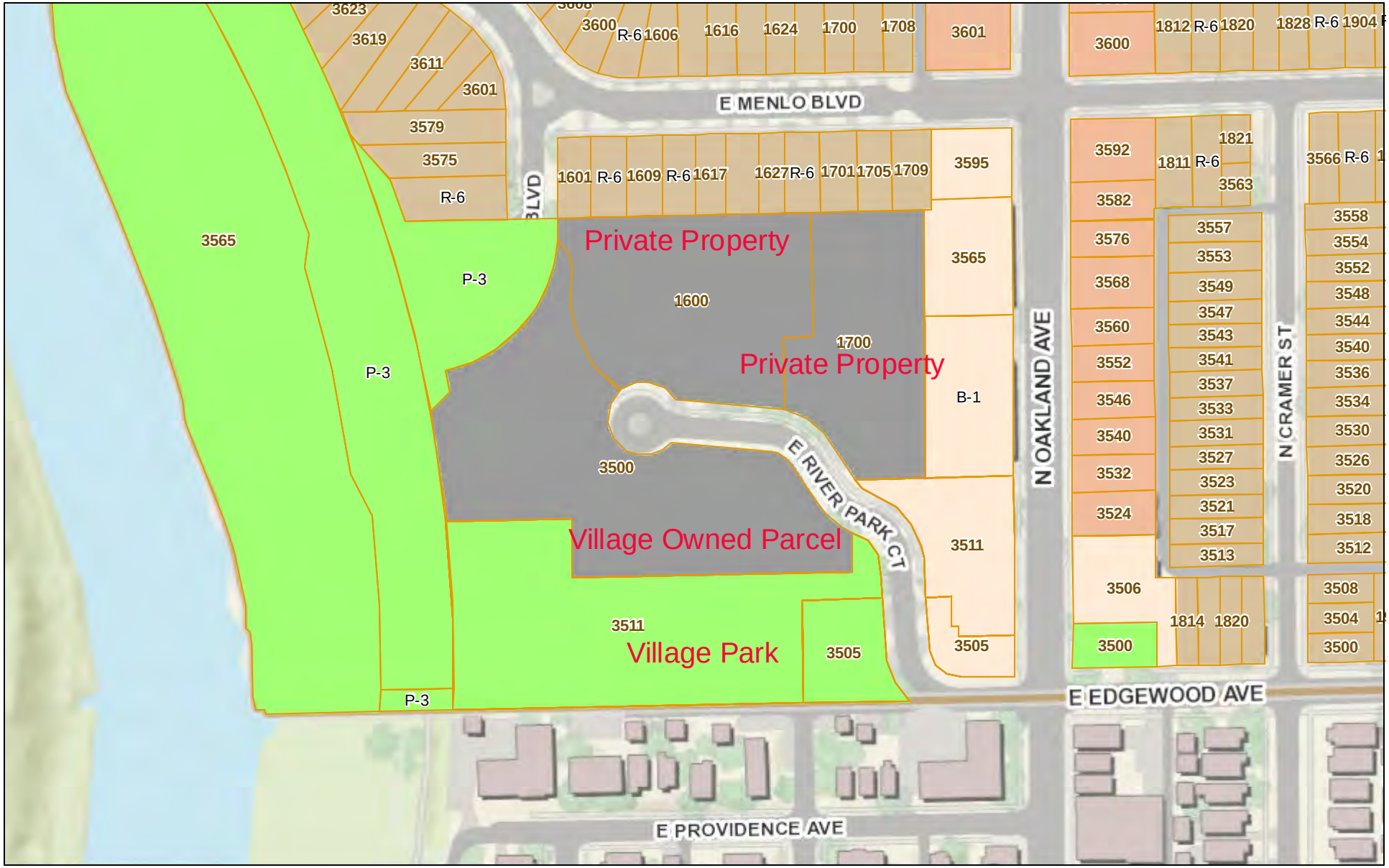

October 25, 2016

Address Numbers

Parcels

Zoning

B-1

B-2

P-3

PDD

R-6

Streets

1:2,257

0 0.0175 0.035 0.07 mi

0 0.02 0.04 0.08 km

Milwaukee County Land Information Office

Web AppBuilder for ArcGIS

Milwaukee County Land Information Office |

EXHIBIT C

Parcel Map- River Park

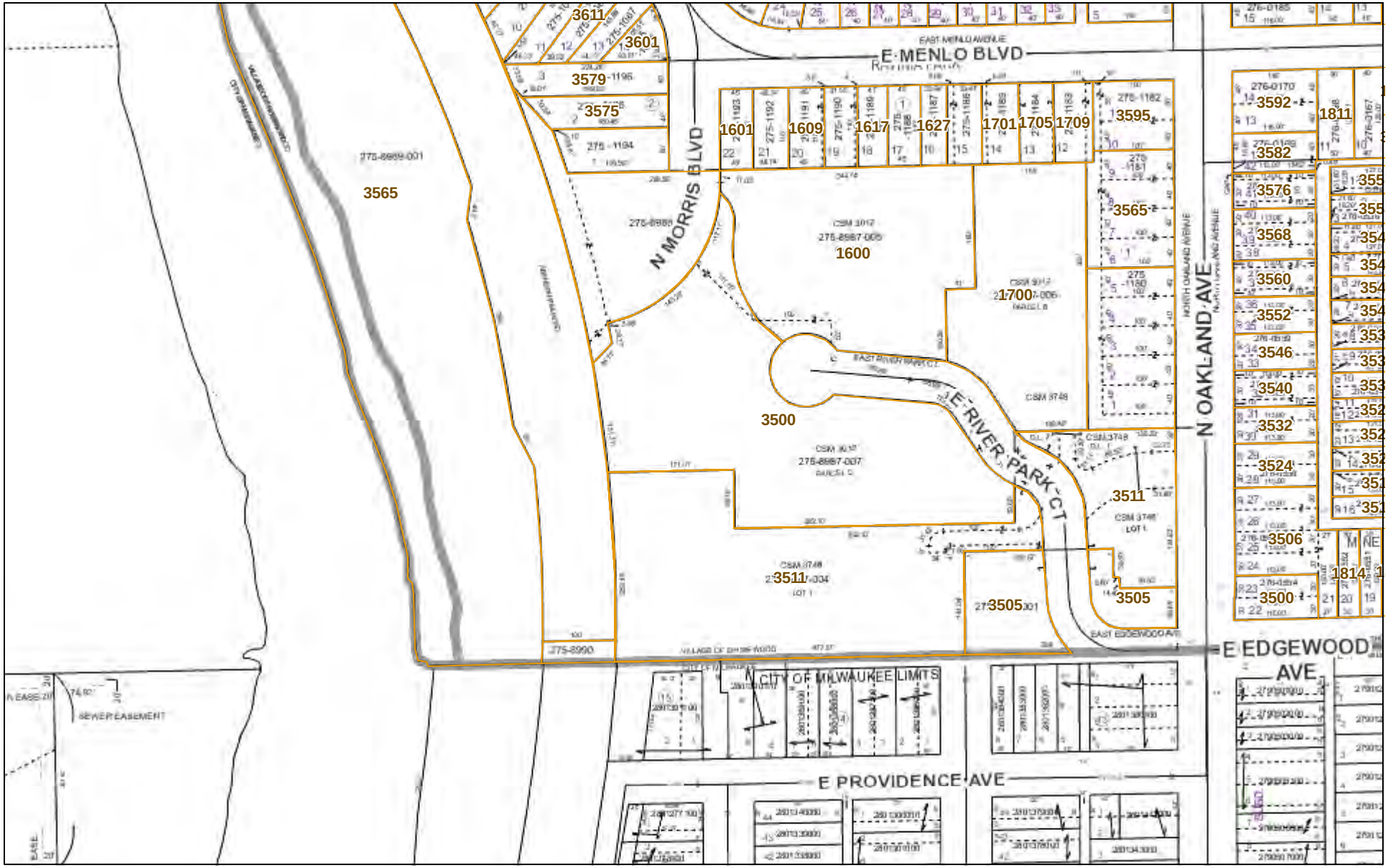

November 16, 2016

Address Numbers

Parcels

Streets

1:2,257

0 0.0175 0.035 0.07 mi

0 0.03 0.06 0.12 km

Milwaukee County Land Information Office

Web AppBuilder for ArcGIS
Milwaukee County Land Information Office |

N MORRIS BLVD
N OAKLAND AVE
E RIVER PARK CT
1601
1605
1609
1613
1617
1623
1627
1631
1701
1600
1700
3565
3500
3511
3505

EXHIBIT D

Article IV: Zoning Districts

535-20 Public and semipublic districts

A. **P-1 School, Church and Public Building District**. The P-1 District is comprised mainly of long-standing public and semipublic buildings in areas throughout the Village. Beyond municipal buildings and public schools, additional permitted uses include private schools, churches and accessory buildings, and facilities devoted to public recreational purposes.

(1) Principal use: public and private schools, including accessory uses and buildings; children's nurseries; churches and accessory rectories; and municipal buildings and facilities, including those devoted to recreational purposes.
(2) Conditional uses: see Article V.
(3) Building:
    (a) Area, maximum: 30% of lot coverage.
    (b) Height, maximum: 50 feet.
(4) Setback:
    (a) Front, minimum: 25 feet.
    (b) Rear, minimum: 15 feet.
    (c) Side:
        [1] Interior, minimum: 10 feet.
        [2] Street side, minimum: 15 feet.[1]
[1] Editor's Note: Original § 8-304D(2), P-2 Hospital Zone District, which immediately followed this subsection, was repealed 6-5-2006 by Ord. No. 1911.

B. **P-3 Park Preservation District**. The aim of the P-3 District is to preserve this zone for scenic, scientific, historic and recreational uses in this zone and to encourage the preservation of undeveloped areas along the Milwaukee River and Lake Michigan.
(1) Principal use: preserve for scenic, historic, scientific and recreational uses.
(2) Lot:
    (a) Width: no minimum.
    (b) Area: no minimum.
(3) Building:
    (a) Area: no minimum.
    (b) Height, maximum: 30 feet.
(4) Setback:
    (a) Front, minimum: 15 feet from all lot lines.
    (b) Rear, minimum: 15 feet from all lot lines.
    (c) Side, minimum: 15 feet from all lot lines.

535 COMMERCIAL ZONING DISTRICT

Amended 2-21-1994 by Ord. No. 1678; 6-5-2006 by Ord. No. 1911; 10-23-2006 by Ord. No. 1917]

535-21 Commercial, mixed-use and river districts

A. **B-1** Commercial Use District. The B-1 Commercial Use District is intended to provide the Village with a mix of retail, service, restaurant, office, and residential uses in a pedestrian-friendly, active shopping environment. Building massing, scale and appearance and the general character of this district should be oriented toward a "small town," "Main Street," pedestrian character. To encourage further retail development within the district, especially in the core blocks extending from the Capitol and Oakland intersection, first-floor commercial is required.

(1) Permitted uses.

(a) Principal use:

[1] Commercial use only on first floor (ground level).

[2] Commercial use or apartment use above first floor.

[3] Selling and storing only within the premises (within the building).

(b) The following uses are permitted provided that they shall be retail establishments and primarily selling and storing new merchandise, and except that the sale or display of firearms or ammunition suitable for use in a firearm is prohibited:

Permitted Retail Uses

Appliance stores
Bakeries employing not over 7 employees
Candy and ice cream shops
China, glassware and crockery stores
Clothing stores
Delicatessens
Department stores
Drugstores
Electronic stores
Florists
Food stores
Furniture stores
Gift stores
Hardware and home improvement stores
Hobby shops
Jewelry stores
Medical equipment stores
Music stores
Office supplies
Optical stores
Packaged beverage stores and wine shops
Paint stores
Pet shops

Photographic supply stores
Specialty grocery stores
Specialty retail stores
Supermarkets

(c) In addition to the uses permitted above, the following service-oriented uses shall also be permitted:

Service-Oriented Permitted Uses
Barbershops
Beauty shops
Business offices
Caterers
Clothing repair and tailoring
Dance instruction studios
Financial institutions
Fine ares studios and galleries
Furniture upholstery shops
Newspaper offices
Printing shops
Private schools
Professional offices
Restaurants, other than carry-out, drive-in or drive-through
Self-service and pickup laundry and dry-cleaning establishments employing not over 7 employees

(2) Uses prohibited.
(a) Buildings that are solely residential in use.
[1] Any land or lot on which there is located a residence of four families or fewer shall not be subdivided for business purposes.
[2] Any building used as a residence of four families or fewer shall not be added to, altered or converted for business purposes.
(b) Manufacturing, repairing, processing or storing of goods, wares, merchandise, machinery, equipment or materials, except such manufacturing, repairing, processing, or storing of said goods, wares, merchandise, machinery, equipment or materials as is customarily incidental to the principal use of the property that is conducted solely within the building and in such manner that is not in conflict with the requirements of Article VIII of this chapter.
(c) Vehicular sales, service and detailing.
(d) Gasoline service stations.
(e) Parking lots with total parking spaces in excess of 100 spaces, except as allowed in § 535-46A(3).
[Added 10-20-2008 by Ord. No. 1944]

(3) Conditional uses: see Article V.
[Amended 2-25-2008 by Ord. No. 1935]

(4) Building:

(a) Height, maximum: see Subsection F, Building height overlay, of this section.

(b) Area: no minimum.

(5) Lot:

(a) Width, minimum: 40 feet.

(b) Area, minimum: 4,500 square feet.

(6) Setback:

(a) Front: build-to line of 15 feet from the street curbline, unless the lot line is at a distance greater than 15 feet from the curbline, then the build-to line shall be the lot line.
[Amended 2-25-2008 by Ord. No. 1935]

(b) Rear: minimum of 5 feet from rear lot line or alley; except that where the rear lot line is adjacent to a residential district, the setback is 10 feet. The Plan Commission may grant a special exception from the rear setback for underground parking garage entrances, not to exceed 15 feet in height, pursuant to the provisions of § 535-51; except that, in lieu of the criteria in § 535-51B, the Plan Commission shall consider the following criteria in an application for a special exception from the rear setback for an underground parking garage entrance:
[Amended 6-16-2008 by Ord. No. 1939]

[1] Safety concerns related to vehicular traffic.

[2] Distance of the entrance relative to the other property lines.

[3] Aesthetics of the entrance.

[4] Such other matters as the Plan Commission deems relevant and material.

(c) Side:

[1] Zero, unless applicable Building Code requirements for dwelling units require a greater distance and except that it shall be 10 feet for a lot that borders a single- or two-family residential district.

[2] Corner lots: a build-to line of 20 feet from the street curbline, except that the side yard setback on corner lots shall be reviewed by the Plan Commission to determine whether a twenty-foot build-to line or another corner lot side yard build-to line is appropriate due to parking considerations and the layout of the intersection, provided further that the corner lot side yard build-to line at the intersection of Capitol Drive and Oakland Avenue is 15 feet.
[Amended 2-25-2008 by Ord. No. 1935]

(7) Design guidelines. Central District Design Guidelines (see Subsection G) shall apply to construction of new buildings, the structural alteration of or additions to existing building, and any substantial modifications to the exterior of any buildings in this district.

Report to Plan Commission **November 22, 2016**

Prepared by: Planning Director Ericka Lang

RE: Discussion of outside storage in the commercial districts

Enforcement of zoning and sign codes is done by the planning director. Typical enforcement items usually involve signage and blocking the public sidewalk. Recently proactive inspections were done for all Shorewood gasoline stations prompted by an increased use of temporary signs including feather banner signs which are prohibited.

While inspecting these properties, most had goods permanently stored outside. Per zoning §535-21B(2)[c], goods cannot be stored outside of buildings. There are pictures on the following pages of wood, ice, crates, salt and propane tanks located in the front or sides of the buildings. To clarify, the code does not allow storage anywhere outside of a building.

There are some retail businesses in Shorewood that display merchandise out along the building, but it is not permanently located there and is removed at the end of each business day.

The planning director is asking for the plan commissions input on this code section as you are granted advisory and other miscellaneous powers. One of the businesses requested an exception which would go to Shorewood's Board of Appeals; however, staff felt a discussion is in order.

Points of discussion:

- If allow, how much and where
- Define goods meant for outdoor storage
- Propane gas tanks cannot be stored indoors
- Equity
- Impact on look of business district

ATM
ICE
Mobil Service

Cigars
Ice
Propane
Fire Wood
Healthier than Homemade
THE BIG BAG
American Prod
NO SMOKING
PROPANE
Home City Ice

Get $20
APPLY TODAY
BACKWOODS

RESERVED PARKING
ARCTIC GLACIER
PREMIUM ICE

shop
ACCEPT
EBT
3624
Cigarettes Sold
At
State Minimum
Markup
ATM
EMERGENCY
GASOLINE
SHUT OFF
PROPANE EXCHANGE STATION
PROPANE EXCHANGE STATION
BACKWOODS
APPLY
TODAY
Get $20
AIR